Electrical

Standard Drawings

36 drawing sheets
Consistent 11 x 17 landscape catalog

Precast light pole bases built to municipal and BC MOT specifications, with custom bolt patterns. We also make BC MOT spec vaults, junction boxes and transformer pads.

Tri-Kon Precast Products Ltd.

601 Patterson Street West
Cranbrook BC V1C 6T3

250-426-8162
info@trikonprecast.com
trikonprecast.com

DRAWING / PRODUCT NAME	CATALOG REFERENCE	SHEET
Drawing catalog	TK-EL-COVER	Cover
DESCRIPTION	**SHEET FORMAT**	**UNITS / SCALE**
Precast light pole bases built to municipal and BC MOT specifications, with custom bolt patterns. We also make BC MOT spec vaults, junction boxes and transformer pads.	11 x 17 in / Landscape	As noted / Do not scale
APPROX. WEIGHT - SOURCE VALUES ONLY	**ORIGINAL SOURCE DATE**	**LAYOUT UPDATED ONLY**
Weights are listed on individual sheets where stated in the source.	Not applicable	2026-10-05

Technical content unchanged. Confirm specifications and handling weights with Tri-Kon. Project examples are not standard designs. Document layout: Built by Vision (BBV).

Drawing directory

Select a sheet to open its drawing. Original technical content and source units are retained.

01	Lamp Bases: 4, 5, 6 and 8 ft (LSB4 to LSB8)
02	Round Lampbase
03	Lamp Base Order Template
04	Type C Concrete Base (BC MoTI SP635-1.1.3)
05	Type CM Modified Type C Concrete Base (BC MoTI SP635-1.1.3a)
06	Type D1 & E1 Concrete Spread Footings (BC MoTI SP635-1.1.4)
07	Type D1 & E1 Concrete Spread Footings (BC MoTI SP635-1.1.5)
08	Type D1 & E1 Concrete Spread Footings (BC MoTI SP635-1.1.6)
09	Types D2 and E2 Concrete Bases, Precast (BC MoTI SP635-1.1.7)
10	Type D2 and E2 Concrete Bases, Precast (BC MoTI SP635-1.1.8)
11	Type D3 and E3 Concrete Bases, Cast in Place (BC MoTI SP635-1.1.9)
12	Type D3 and E3 Concrete Bases, Cast in Place (BC MoTI SP635-1.1.10)
13	Type F1, L1 & S1 Concrete Spread Footings (BC MoTI SP635-1.1.11)
14	Type F1, L1 & S1 Concrete Spread Footings (BC MoTI SP635-1.1.12)
15	Type F1, L1 & S1 Concrete Spread Footings (BC MoTI SP635-1.1.13)
16	Type F2, L2 and S2 Concrete Bases, Precast (BC MoTI SP635-1.1.14)
17	Type F2, L2 and S2 Concrete Bases, Precast (BC MoTI SP635-1.1.15)
18	Anchor Bolt Cage for Type L Poles (BC MoTI SP635-1.1.19)
19	Type M1 Concrete Spread Footing (BC MoTI SP635-1.1.20)
20	Type M1 Concrete Spread Footing (BC MoTI SP635-1.1.21)
21	Type M1 Concrete Spread Footing (BC MoTI SP635-1.1.22)
22	Type M2 Concrete Base, Cast in Place (BC MoTI SP635-1.1.23)
23	Type M2 Concrete Base, Precast or Cast in Place (BC MoTI SP635-1.1.24)
24	Anchor Bolt Cage for Type M Poles (BC MoTI SP635-1.1.25)
25	Type H1 Concrete Spread Footing (BC MoTI SP635-1.1.26)
26	Type H1 Concrete Spread Footing (BC MoTI SP635-1.1.27)
27	Type H1 Concrete Spread Footing (BC MoTI SP635-1.1.28)
28	Type H2 Concrete Base, Precast or Cast in Place (BC MoTI SP635-1.1.29)
29	Type H2 Concrete Base, Cast in Place (BC MoTI SP635-1.1.30)
30	Anchor Bolt Cage for Type H Poles (BC MoTI SP635-1.1.31)
31	Concrete Controller Base Details, Precast (BC MoTI SP635-1.1.38)
32	Concrete Controller Base Rebar Details, Precast (BC MoTI SP635-1.1.39)
33	Concrete Junction Box Details (BC MoTI SP635-1.3.1)
34	Concrete Junction Box Details (BC MoTI SP635-1.3.2)
35	Small Concrete Vault, 1020 Square x 1015 Deep (BC MoTI SP635-1.3.3)
36	Concrete Vault, 1520 Square x 1230 Deep (BC MoTI SP635-1.3.4)

Tri-Kon Precast Products Ltd.

601 Patterson Street West
Cranbrook BC V1C 6T3

250-426-8162
info@trikonprecast.com
trikonprecast.com

DRAWING / PRODUCT NAME	CATALOG REFERENCE	SHEET
Drawing directory	TK-EL-INDEX	Index / 36 drawings
DESCRIPTION	**SHEET FORMAT**	**UNITS / SCALE**
Precast light pole bases built to municipal and BC MOT specifications, with custom bolt patterns. We also make BC MOT spec vaults, junction boxes and transformer pads.	11 x 17 in / Landscape	As noted / Do not scale
APPROX. WEIGHT - SOURCE VALUES ONLY	**ORIGINAL SOURCE DATE**	**LAYOUT UPDATED ONLY**
Weights are listed on individual sheets where stated in the source.	Not applicable	2026-10-05

Technical content unchanged. Confirm specifications and handling weights with Tri-Kon. Project examples are not standard designs. Document layout: Built by Vision (BBV).

Electrical

Lamp Bases: 4, 5, 6 and 8 ft (LSB4 to LSB8)

TRI-KON SOURCE

PRODUCT REFERENCE / DO NOT SCALE

4 FT LAMP BASE LSB4

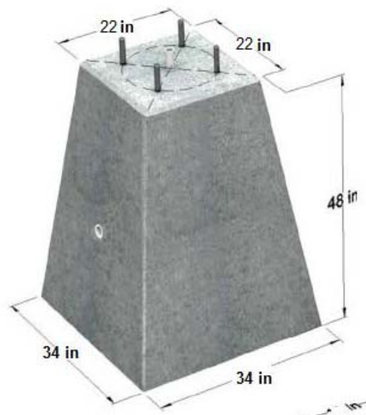

5 FT LAMP BASE LSB5

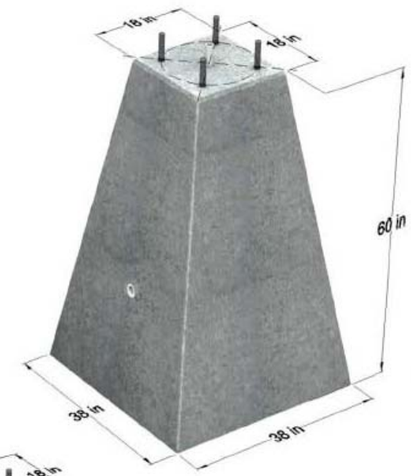

Approximate Weights (lbs/kg)
LSB4 - 3450 lbs / 1565 kg.
LSB5 - 4100 lbs / 1860 kg
LBS6 - 5720 lbs / 2600 kg
LBS8 - 10,270 lbs / 4660 kg

SPECIFY LOCATION & ELEVATION
OF ELECTRICAL CONDUIT

SPECIFY MOUNTING BOLT DIAMETER
& SPACING CENTER

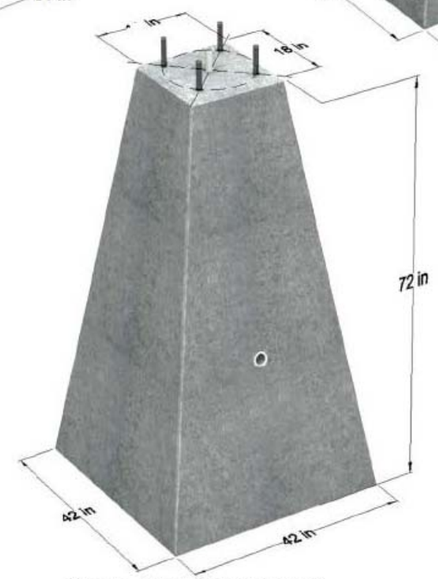

6 FT LAMP BASE LSB6

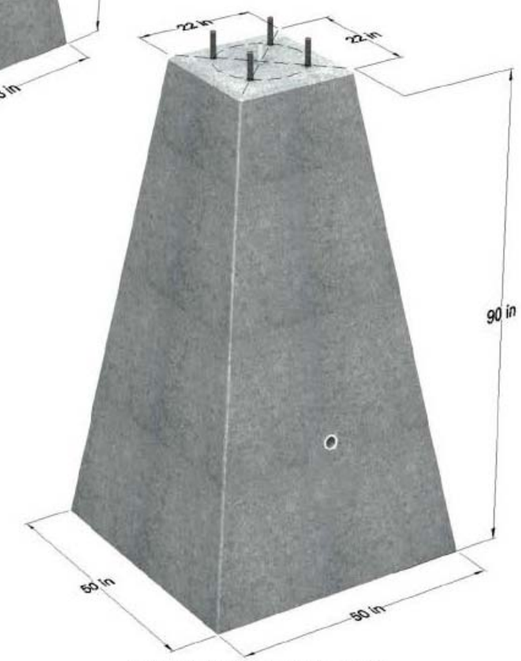

8 FT LAMP BASE LSB8

Tri-Kon Precast Products Ltd.

601 Patterson Street West
Cranbrook BC V1C 6T3

250-426-8162
info@trikonprecast.com
trikonprecast.com

DRAWING / PRODUCT NAME	CATALOG REFERENCE	SHEET
Lamp Bases: 4, 5, 6 and 8 ft (LSB4 to LSB8)	TK-EL-001	01 / 36
DESCRIPTION	**SHEET FORMAT**	**UNITS / SCALE**
Precast light pole bases built to municipal and BC MOT specifications, with custom bolt patterns. We also make BC MOT spec vaults, junction boxes and transformer pads.	11 x 17 in / Landscape	As noted / Do not scale
APPROX. WEIGHT - SOURCE VALUES ONLY	**ORIGINAL SOURCE DATE**	**LAYOUT UPDATED ONLY**
See drawing / confirm with Tri-Kon; no weight estimated.	As recorded in original	2026-10-05

Technical content unchanged. Confirm specifications and handling weights with Tri-Kon. Project examples are not standard designs. Document layout: Built by Vision (BBV).

GENERAL NOTES:

1. ALL CONSTRUCTION SHALL CONFORM TO RELEVANT LOCAL BUILDING CODES SUCH AS BCBC:2018, NBC:2020, NBC-2019 ALBERTA EDITION.
2. ALL REFERENCES TO STANDARDS SHALL REFER TO THE LATEST REVISED ISSUE.
3. THE STRUCTURAL ENGINEER ASSUMES NO RESPONSIBILITY FOR INSPECTION OF CULVERT INSTALLATION UNLESS EXPRESSLY RETAINED TO DO SO.
4. EDGES TO COME WITH 2mm CHAMFER

CONCRETE:

1) ALL CONCRETE WORK SHALL BE IN ACCORDANCE WITH SPECIFICATIONS AND CSA STANDARD CSA-A23.2:19. FOR PRECAST CONCRETE WORK REFER TO CSA-A23.4:16.

2) CONCRETE PROPERTIES:

- AGG SIZE = 20mm
- STRENGTH = 30Mpa
- W/C = 0.40
- AIR = 4-7%
- CEMENT TYPE = HS
- EXPOSURE = F-2

1) BEFORE PLACING CONCRETE, THE CONTRACTOR SHALL CHECK ALL APPLICABLE DRAWINGS FOR ANCHOR BOLTS, INSERTS, EMBEDS, RECESSES AND BLOCKOUTS. THEIR LOCATIONS SHALL BE CONFIRMED BY THE VARIOUS SUBTRADES.
2) MINIMUM CONCRETE COVER OVER REINFORCEMENT IS TO BE 40mm.
3) CONCRETE COMPRESSIVE STRENGTH SHALL BE AT LEAST 17 MPa BEFORE STRIPPING FORMS.

REINFORCING:

1) REINFORCING STEEL IS TO CONFORM TO CSA G30.12M-GRADE 400 MPa.
2) REINFORCING STEEL IS TO BE PLACED AS DETAILED TO 10mm TOLERANCE AND IS TO BE SUPPORTED BY METAL OR PLASTIC SUPPORTS AND/OR HANGERS IN ACCORDANCE WITH CAN/CSA A23.1.
3) LAP ALL REINFORCING BAR SPLICES 32 BAR DIAMETERS MINIMUM UNLESS INDICATED OTHERWISE ON THE DRAWINGS.
4) REINFORCING STEEL IS TO BE CLEAN, FREE OF CORROSION & UNDAMAGED.
5) DO NOT WELD BARS OR USE HEAT TO BEND REINFORCING STEEL.

GEOTECHNICAL:

- ASSUMED GEOTECHNICAL PARAMETERS FOR DESIGN AS FOLLOWS:
- SOIL UNIT WEIGHT = 25 ton/m³ (22 kN/m²)
- ASSUMED COHESIONLESS SOIL
- SOIL INTERNAL FRICTION ANGLE = 30°
- FACTORED BEARING CAPACITY = 100 kPa
- CONCRETE/SOIL FRICTION COEFFICIENT = 0.3
- MAXIMUM BACKFILL SLOPE = 15°

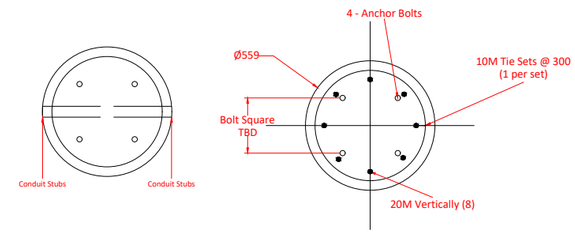

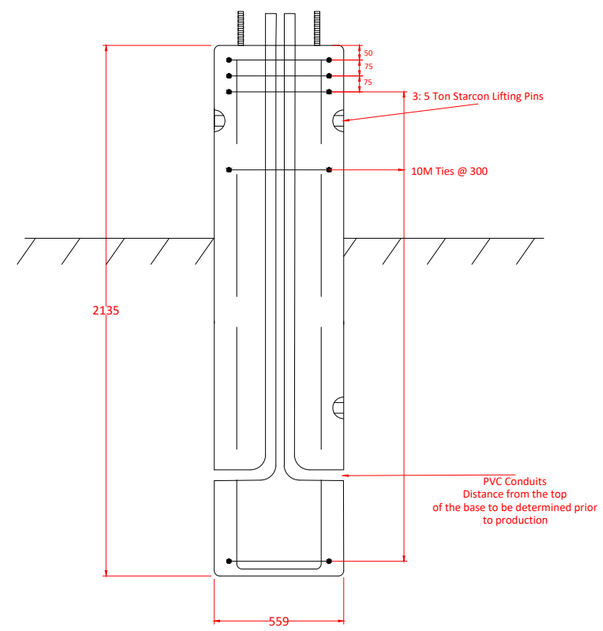

Tri-Kon Precast Products Ltd.

601 Patterson Street West
Cranbrook BC V1C 6T3

250-426-8162
info@trikonprecast.com
trikonprecast.com

DRAWING / PRODUCT NAME	CATALOG REFERENCE	SHEET
Round Lampbase	TK-EL-002	02 / 36
DESCRIPTION	**SHEET FORMAT**	**UNITS / SCALE**
Precast light pole bases built to municipal and BC MOT specifications, with custom bolt patterns. We also make BC MOT spec vaults, junction boxes and transformer pads.	11 x 17 in / Landscape	As noted / Do not scale
APPROX. WEIGHT - SOURCE VALUES ONLY	**ORIGINAL SOURCE DATE**	**LAYOUT UPDATED ONLY**
See drawing / confirm with Tri-Kon; no weight estimated.	01/01/2024	2026-10-05

Technical content unchanged. Confirm specifications and handling weights with Tri-Kon. Project examples are not standard designs. Document layout: Built by Vision (BBV).

Lamp base Order Template

Contractor: _____ *Date Ordered:* _____

Project: _____ *Date Required:* _____

Signature: _____

	Quantity Required:	Ground Wire:
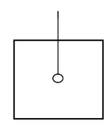	_____	_____
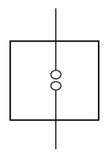	_____	_____
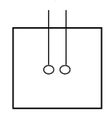	_____	_____

Details
(Lamp base won't be manufactured unless **ALL** information is filled out)

Conduit Size: _____inch / mm

Bolt Square: _____inch / mm

Bolt Size: _____inch / mm

Conduit stubs to be _____inch/mm down from top of base

Specify Other Pattern (If Different than above):

	_____	_____
	_____	_____
	_____	_____

Tri-Kon Precast Products Ltd.

601 Patterson Street West
Cranbrook BC V1C 6T3

250-426-8162
info@trikonprecast.com
trikonprecast.com

DRAWING / PRODUCT NAME	CATALOG REFERENCE	SHEET
Lamp Base Order Template	TK-EL-003	03 / 36
DESCRIPTION	SHEET FORMAT	UNITS / SCALE
Precast light pole bases built to municipal and BC MOT specifications, with custom bolt patterns. We also make BC MOT spec vaults, junction boxes and transformer pads.	11 x 17 in / Landscape	As noted / Do not scale
APPROX. WEIGHT - SOURCE VALUES ONLY	ORIGINAL SOURCE DATE	LAYOUT UPDATED ONLY
See drawing / confirm with Tri-Kon; no weight estimated.	As recorded in original	2026-10-05

Technical content unchanged. Confirm specifications and handling weights with Tri-Kon. Project examples are not standard designs. Document layout: Built by Vision (BBV).

SECTION 635 **ELECTRICAL AND SIGNING**

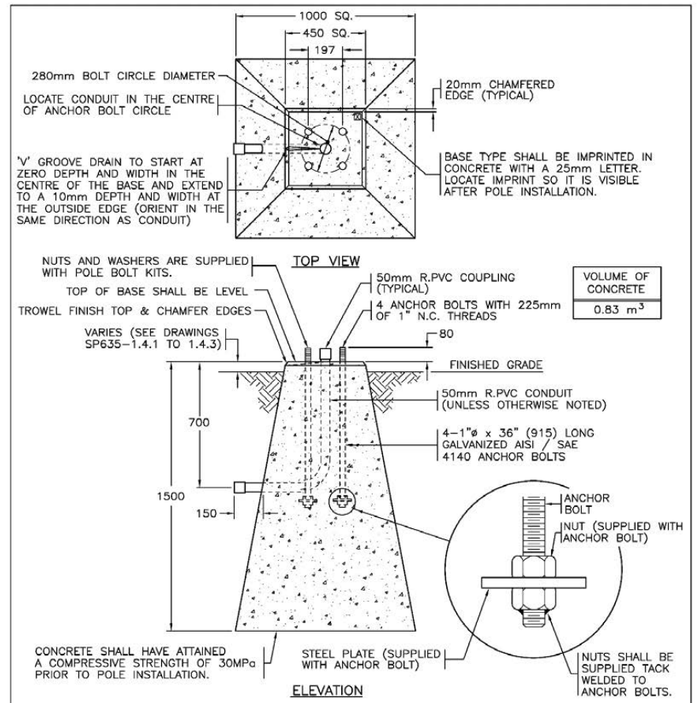

VOLUME OF CONCRETE
0.83 m^3

BASE TYPE	POLE TYPE	APPROXIMATE MASS
C	7.5m, 9.0m AND 11.0m TYPE 2 AND TYPES 4, 4A AND 5 POLES	2000 kg

NOTES
1. SEE STANDARD SPECIFICATIONS & SPECIAL PROVISIONS FOR ADDITIONAL INFORMATION.
2. ALL DIMENSIONS ARE IN MILLIMETRES UNLESS OTHERWISE NOTED.
3. SEE DRAWINGS SP635-1.4.1 TO 1.4.4 FOR BACKFILL REQUIREMENTS.

NOT TO SCALE

BRITISH COLUMBIA — Ministry of Transportation and Infrastructure

No.	Revision	Date
F		
E		
D	TITLE UPDATED	APR 20
C	GENERAL REVISIONS	APR 17
B	ELEVATION OF BASE TO FINISHED GRADE REVISED	AUG 95
A	GENERAL REVISIONS	AUG 94

TYPE C CONCRETE BASE (PRECAST OR CAST IN PLACE)

Date Approved: 30/09/93 E.L. (Signature on File) Chief Highway Engineer

SPECIFICATION DRAWING No. SP635-1.1.3

Tri-Kon Precast Products Ltd.

601 Patterson Street West
Cranbrook BC V1C 6T3

250-426-8162
info@trikonprecast.com
trikonprecast.com

DRAWING / PRODUCT NAME	CATALOG REFERENCE	SHEET
Type C Concrete Base (BC MoTI SP635-1.1.3)	TK-EL-004	04 / 36
DESCRIPTION	**SHEET FORMAT**	**UNITS / SCALE**
Original reference: Type C Concrete Base (BC MoTI SP635-1.1.3). Technical notes and source identification are preserved.	11 x 17 in / Landscape	As noted / Do not scale
APPROX. WEIGHT - SOURCE VALUES ONLY	**ORIGINAL SOURCE DATE**	**LAYOUT UPDATED ONLY**
See drawing / confirm with Tri-Kon; no weight estimated.	As recorded in original	2026-10-05

Technical content unchanged. Confirm specifications and handling weights with Tri-Kon. Project examples are not standard designs. Document layout: Built by Vision (BBV).

SECTION 635 **ELECTRICAL AND SIGNING**

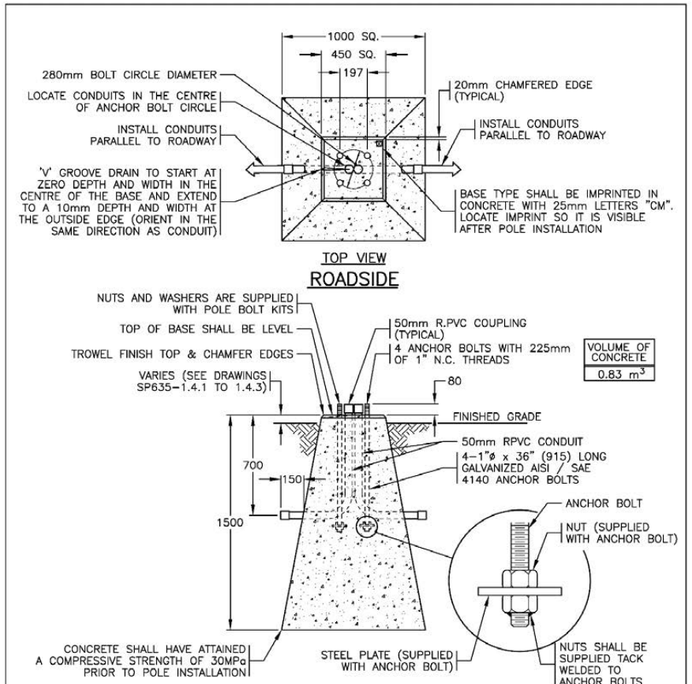

NOTES:

1. SEE STANDARD SPECIFICATIONS & SPECIAL PROVISIONS FOR ADDITIONAL INFORMATION.
2. ALL DIMENSIONS ARE IN MILLIMETRES UNLESS OTHERWISE NOTED.
3. SEE DRAWINGS SP635-1.4.1 TO 1.4.4 FOR BACKFILL REQUIREMENTS.

BASE TYPE	POLE TYPE	APPROXIMATE MASS
CM	7.5m, 9.0m AND 11.0m TYPE 2 AND TYPES 4, 4A AND 5 POLES	2000 kg

BRITISH COLUMBIA — Ministry of Transportation and Infrastructure

NOT TO SCALE

No.	Revision	Date
F		
E		
D		
C		
B	TITLE UPDATED	APR 20
A	GENERAL REVISIONS	APR 17

TYPE CM MODIFIED TYPE C CONCRETE BASE (PRECAST OR CAST IN PLACE)

Date Approved: 09/02/16 D.N. (Signature on File) Chief Highway Engineer

SPECIFICATION DRAWING No. SP635-1.1.3a

BC MoTI SS 2020 635 (21 of 277)

Vol. 2 Page 34 of 452

Tri-Kon Precast Products Ltd.

601 Patterson Street West
Cranbrook BC V1C 6T3

250-426-8162
info@trikonprecast.com
trikonprecast.com

DRAWING / PRODUCT NAME	CATALOG REFERENCE	SHEET
Type CM Modified Type C Concrete Base (BC MoTI SP635-1.1.3a)	TK-EL-005	05 / 36
DESCRIPTION	**SHEET FORMAT**	**UNITS / SCALE**
Original reference: Type CM Modified Type C Concrete Base (BC MoTI SP635-1.1.3a). Technical notes and source identification are preserved.	11 x 17 in / Landscape	As noted / Do not scale
APPROX. WEIGHT - SOURCE VALUES ONLY	**ORIGINAL SOURCE DATE**	**LAYOUT UPDATED ONLY**
See drawing / confirm with Tri-Kon; no weight estimated.	As recorded in original	2026-10-05

Technical content unchanged. Confirm specifications and handling weights with Tri-Kon. Project examples are not standard designs. Document layout: Built by Vision (BBV).

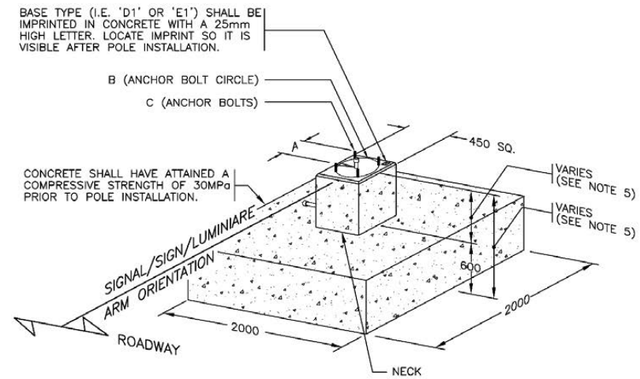

CONCRETE SPREAD FOOTING

BASE TYPE	POLE TYPE	VOLUME OF CONCRETE	MASS OF REBAR	FORMWORK	APPROXIMATE MASS	A	B	C (ANCHOR BOLTS)
D1	13.5m TYPE 2 POLES	2.7 m^3*	260 kg*	7.3 m^2*	6600 kg*	216	305	4–1 1/4"ø x 48" (1220) GALVANIZED AISI / SAE 4140
E1	TYPE 1 AND 3 POLES	2.7 m^3*	260 kg*	7.3 m^2*	6600 kg*	197	280	4–1"ø x 36" (915) GALVANIZED AISI / SAE 4140

(*) BASED ON SPREAD FOOTING WITH 1400 HIGH NECK

NOTES

1. SEE STANDARD SPECIFICATIONS & SPECIAL PROVISIONS FOR ADDITIONAL INFORMATION.
2. SEE PLANS FOR SIGNAL/SIGN/LUMINIARE ARM ORIENTATION.
3. SEE DRAWINGS SP635–1.1.5, 1.1.6 & 1.4.5 FOR ADDITIONAL DETAILS.
4. ALL DIMENSIONS ARE IN MILLIMETRES UNLESS OTHERWISE NOTED.
5. NECK HEIGHT MAY VARY FROM 750 to 1400. SEE DRAWING SP635–1.4.5 FOR MORE INFORMATION.

BASE DESIGNED FOR SOILS WITH A MINIMUM BEARING PRESSURE OF 100KPa

NOT TO SCALE

BRITISH COLUMBIA Ministry of Transportation and Infrastructure

No.	Revision	Date
F		
E		
D		
C		
B	TITLE UPDATED	APR 20
A	GENERAL REVISIONS	APR 17

TYPE D1 & E1 CONCRETE SPREAD FOOTINGS (PRECAST OR CAST IN PLACE)

Date 15/11/95 Approved M.C. (Signature on File) Chief Highway Engineer

SPECIFICATION DRAWING No. SP635–1.1.4

Tri-Kon Precast Products Ltd.

601 Patterson Street West
Cranbrook BC V1C 6T3

250-426-8162
info@trikonprecast.com
trikonprecast.com

DRAWING / PRODUCT NAME	CATALOG REFERENCE	SHEET
Type D1 & E1 Concrete Spread Footings (BC MoTI SP635-1.1.4)	TK-EL-006	06 / 36
DESCRIPTION	**SHEET FORMAT**	**UNITS / SCALE**
Original reference: Type D1 & E1 Concrete Spread Footings (BC MoTI SP635-1.1.4). Technical notes and source identification are preserved.	11 x 17 in / Landscape	As noted / Do not scale
APPROX. WEIGHT - SOURCE VALUES ONLY	**ORIGINAL SOURCE DATE**	**LAYOUT UPDATED ONLY**
See drawing / confirm with Tri-Kon; no weight estimated.	As recorded in original	2026-10-05

Technical content unchanged. Confirm specifications and handling weights with Tri-Kon. Project examples are not standard designs. Document layout: Built by Vision (BBV).

SECTION 635 ELECTRICAL AND SIGNING

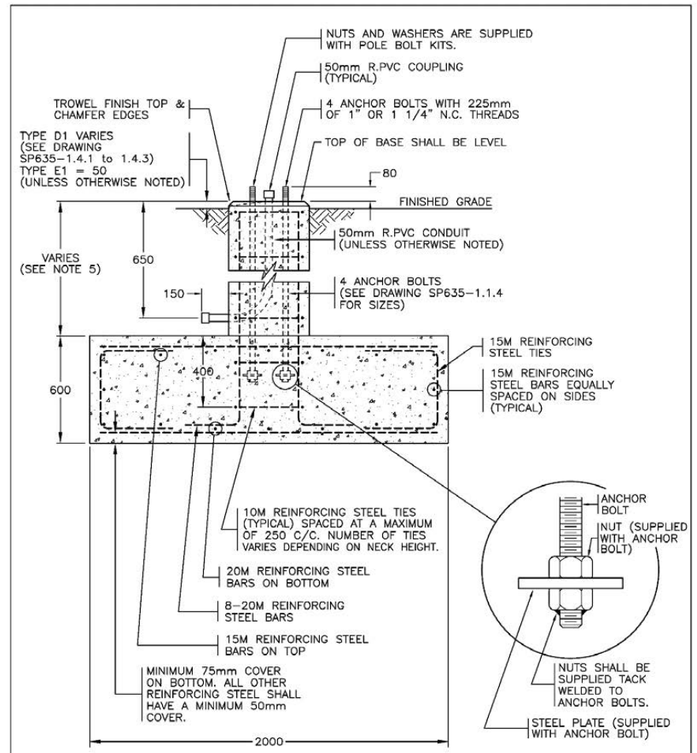

SEE DRAWING SP635-1.1.4 FOR NOTES AND ADDITIONAL DETAILS

NOT TO SCALE

BRITISH COLUMBIA Ministry of Transportation and Infrastructure

No.	Revision	Date
F		
E		
D		
C	GENERAL REVISIONS	APR 20
B	GENERAL REVISIONS	APR 17
A	ELEVATION OF BASE TO FINISHED GRADE REV'D	AUG 96

TYPE D1 & E1 CONCRETE SPREAD FOOTINGS (PRECAST OR CAST IN PLACE)

Date 15/11/95 Approved M.C. (Signature on File) Chief Highway Engineer

SPECIFICATION DRAWING No. SP635-1.1.5

Tri-Kon Precast Products Ltd.

601 Patterson Street West
Cranbrook BC V1C 6T3

250-426-8162
info@trikonprecast.com
trikonprecast.com

DRAWING / PRODUCT NAME	CATALOG REFERENCE	SHEET
Type D1 & E1 Concrete Spread Footings (BC MoTI SP635-1.1.5)	TK-EL-007	07 / 36
DESCRIPTION	**SHEET FORMAT**	**UNITS / SCALE**
Original reference: Type D1 & E1 Concrete Spread Footings (BC MoTI SP635-1.1.5). Technical notes and source identification are preserved.	11 x 17 in / Landscape	As noted / Do not scale
APPROX. WEIGHT - SOURCE VALUES ONLY	**ORIGINAL SOURCE DATE**	**LAYOUT UPDATED ONLY**
See drawing / confirm with Tri-Kon; no weight estimated.	As recorded in original	2026-10-05

Technical content unchanged. Confirm specifications and handling weights with Tri-Kon. Project examples are not standard designs. Document layout: Built by Vision (BBV).

SECTION 635 **ELECTRICAL AND SIGNING**

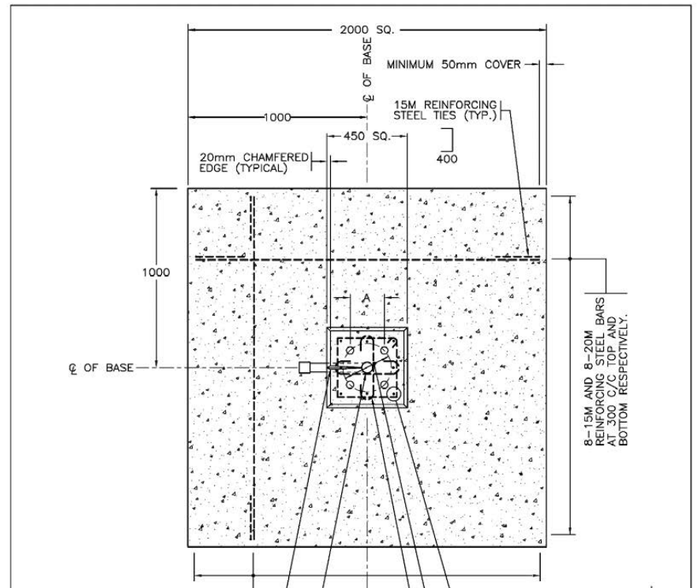

SEE DRAWING SP635–1.1.4 FOR NOTES AND ADDITIONAL DETAILS

NOT TO SCALE

BRITISH COLUMBIA | Ministry of Transportation and Infrastructure

No.	Revision	Date
F		
E		
D		
C		
B	TITLE UPDATED	APR 20
A	GENERAL REVISIONS	APR 17

TYPE D1 & E1 CONCRETE SPREAD FOOTINGS (PRECAST OR CAST IN PLACE)

Date 15/11/95 Approved M.C. (Signature on File) Chief Highway Engineer

SPECIFICATION DRAWING No. SP635–1.1.6

Tri-Kon Precast Products Ltd.

601 Patterson Street West
Cranbrook BC V1C 6T3

250-426-8162
info@trikonprecast.com
trikonprecast.com

DRAWING / PRODUCT NAME	CATALOG REFERENCE	SHEET
Type D1 & E1 Concrete Spread Footings (BC MoTI SP635-1.1.6)	TK-EL-008	08 / 36
DESCRIPTION	**SHEET FORMAT**	**UNITS / SCALE**
Original reference: Type D1 & E1 Concrete Spread Footings (BC MoTI SP635-1.1.6). Technical notes and source identification are preserved.	11 x 17 in / Landscape	As noted / Do not scale
APPROX. WEIGHT - SOURCE VALUES ONLY	**ORIGINAL SOURCE DATE**	**LAYOUT UPDATED ONLY**
See drawing / confirm with Tri-Kon; no weight estimated.	As recorded in original	2026-10-05

Technical content unchanged. Confirm specifications and handling weights with Tri-Kon. Project examples are not standard designs. Document layout: Built by Vision (BBV).

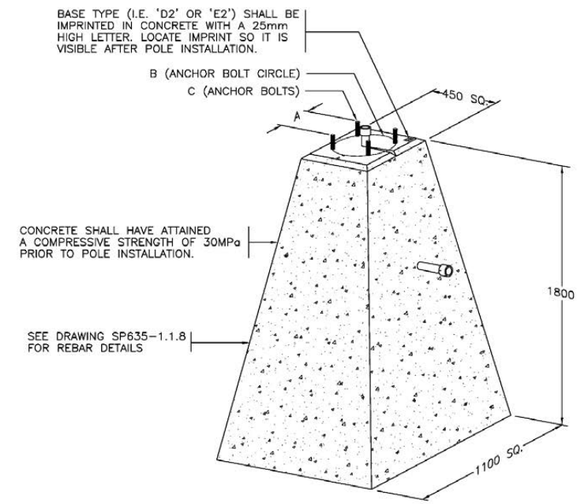

PRECAST CONCRETE BASES

BASE TYPE	POLE TYPE	APPROXIMATE MASS	VOLUME OF CONCRETE	A	B	C (ANCHOR BOLTS)
D2	13.5m TYPE 2 POLES	2450 kg	1.0 m^3	216	305	4–1 1/4"ø x 48" (1220) GALVANIZED AISI / SAE 4140
E2	TYPE 1 AND 3 POLES	2410 kg	1.0 m^3	197	280	4–1"ø x 36" (915) GALVANIZED AISI / SAE 4140

NOTES

1. SEE STANDARD SPECIFICATIONS & SPECIAL PROVISIONS FOR ADDITIONAL INFORMATION.
2. ALL DIMENSIONS ARE IN MILLIMETRES UNLESS OTHERWISE NOTED.
3. SEE DRAWING SP635–1.1.8 FOR ADDITIONAL DETAILS.
4. SEE DRAWINGS SP635–1.4.1 TO 1.4.4 FOR BACKFILL REQUIREMENTS.

NOT TO SCALE

British Columbia | Ministry of Transportation and Infrastructure

No.	Revision	Date
F		
E		
D	GENERAL REVISIONS	APR 17
C	REBAR DRAWING REFERENCE REVISED	AUG 96
B	DRAWING NUMBER CHANGED	AUG 95
A	GENERAL REVISIONS	AUG 94

TYPES D2 AND E2 CONCRETE BASES (PRECAST)

Date 30/09/93 Approved E.L. (Signature on File) Chief Highway Engineer

SPECIFICATION DRAWING No. SP635–1.1.7

Tri-Kon Precast Products Ltd.

601 Patterson Street West
Cranbrook BC V1C 6T3

250-426-8162
info@trikonprecast.com
trikonprecast.com

DRAWING / PRODUCT NAME	CATALOG REFERENCE	SHEET
Types D2 and E2 Concrete Bases, Precast (BC MoTI SP635-1.1.7)	TK-EL-009	09 / 36
DESCRIPTION	**SHEET FORMAT**	**UNITS / SCALE**
Original reference: Types D2 and E2 Concrete Bases, Precast (BC MoTI SP635-1.1.7). Technical notes and source identification are preserved.	11 x 17 in / Landscape	As noted / Do not scale
APPROX. WEIGHT - SOURCE VALUES ONLY	**ORIGINAL SOURCE DATE**	**LAYOUT UPDATED ONLY**
See drawing / confirm with Tri-Kon; no weight estimated.	As recorded in original	2026-10-05

Technical content unchanged. Confirm specifications and handling weights with Tri-Kon. Project examples are not standard designs. Document layout: Built by Vision (BBV).

SECTION 635 ELECTRICAL AND SIGNING

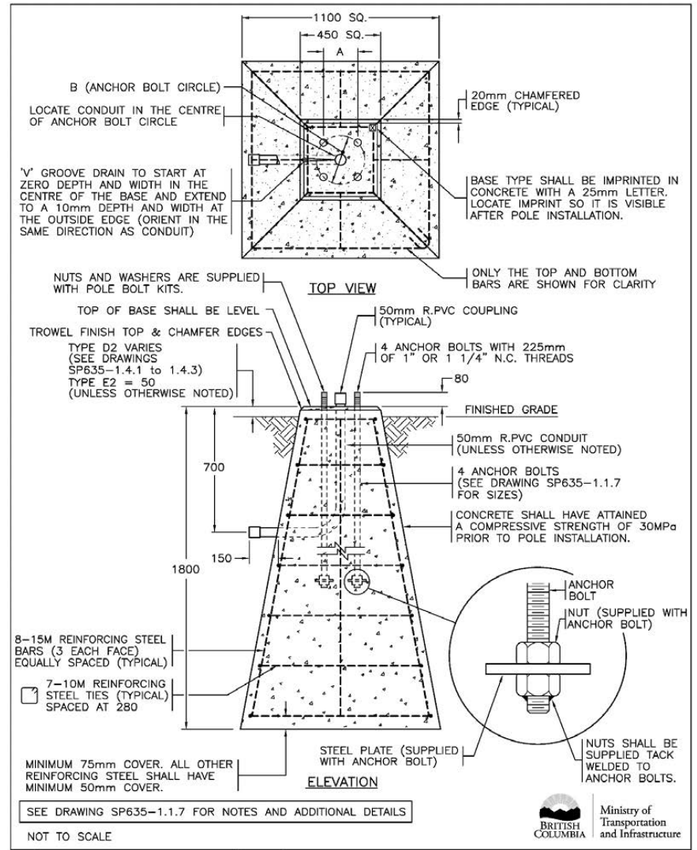

No.	Revision	Date
F		
E	GENERAL REVISIONS	APR 20
D	GENERAL REVISIONS	APR 17
C	ELEVATION OF BASE TO FINISHED GRADE REV'D	AUG 96
B	REBAR ADDED	AUG 95
A	GENERAL REVISIONS	AUG 94

Tri-Kon Precast Products Ltd.

601 Patterson Street West
Cranbrook BC V1C 6T3

250-426-8162
info@trikonprecast.com
trikonprecast.com

DRAWING / PRODUCT NAME	CATALOG REFERENCE	SHEET
Type D2 and E2 Concrete Bases, Precast (BC MoTI SP635-1.1.8)	TK-EL-010	10 / 36
DESCRIPTION	**SHEET FORMAT**	**UNITS / SCALE**
Original reference: Type D2 and E2 Concrete Bases, Precast (BC MoTI SP635-1.1.8). Technical notes and source identification are preserved.	11 x 17 in / Landscape	As noted / Do not scale
APPROX. WEIGHT - SOURCE VALUES ONLY	**ORIGINAL SOURCE DATE**	**LAYOUT UPDATED ONLY**
See drawing / confirm with Tri-Kon; no weight estimated.	As recorded in original	2026-10-05

Technical content unchanged. Confirm specifications and handling weights with Tri-Kon. Project examples are not standard designs. Document layout: Built by Vision (BBV).

SECTION 635 ELECTRICAL AND SIGNING

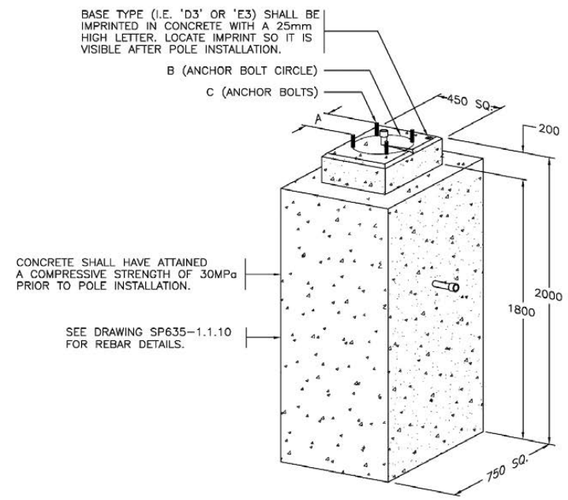

POURED IN PLACE CONCRETE BASES

BASE TYPE	POLE TYPE	APPROXIMATE MASS	VOLUME OF CONCRETE	A	B	C (ANCHOR BOLTS)
D3	13.5m TYPE 2 POLES	2550 kg	1.05 m^3	216	305	4–1 1/4"ø x 48" (1220) GALVANIZED AISI / SAE 4140
E3	TYPE 1 AND 3 POLES	2510 kg	1.05 m^3	197	280	4–1"ø x 36" (915) GALVANIZED AISI / SAE 4140

NOTES

1. SEE STANDARD SPECIFICATIONS & SPECIAL PROVISIONS FOR ADDITIONAL INFORMATION.
2. ALL DIMENSIONS ARE IN MILLIMETRES UNLESS OTHERWISE NOTED.
3. SEE DRAWINGS SP635–1.1.10 FOR ADDITIONAL DETAILS.
4. SEE DRAWINGS SP635–1.4.1 TO 1.4.4 FOR BACKFILL REQUIREMENTS.

NOT TO SCALE

British Columbia | Ministry of Transportation and Infrastructure

No.	Revision	Date
F		
E		
D	TITLE UPDATED	APR 20
C	GENERAL REVISIONS	APR 17
B	DRAWING NUMBER CHANGED	AUG 95
A	GENERAL REVISIONS	AUG 94

TYPE D3 AND E3 CONCRETE BASES (CAST IN PLACE)

Date Approved: 30/09/93 E.L. (Signature on File) Chief Highway Engineer

SPECIFICATION DRAWING No. SP635–1.1.9

Tri-Kon Precast Products Ltd.

601 Patterson Street West
Cranbrook BC V1C 6T3

250-426-8162
info@trikonprecast.com
trikonprecast.com

DRAWING / PRODUCT NAME	CATALOG REFERENCE	SHEET
Type D3 and E3 Concrete Bases, Cast in Place (BC MoTI SP635-1.1.9)	TK-EL-011	11 / 36
DESCRIPTION	**SHEET FORMAT**	**UNITS / SCALE**
Original reference: Type D3 and E3 Concrete Bases, Cast in Place (BC MoTI SP635-1.1.9). Technical notes and source identification are preserved.	11 x 17 in / Landscape	As noted / Do not scale
APPROX. WEIGHT - SOURCE VALUES ONLY	**ORIGINAL SOURCE DATE**	**LAYOUT UPDATED ONLY**
See drawing / confirm with Tri-Kon; no weight estimated.	As recorded in original	2026-10-05

Technical content unchanged. Confirm specifications and handling weights with Tri-Kon. Project examples are not standard designs. Document layout: Built by Vision (BBV).

SECTION 635 **ELECTRICAL AND SIGNING**

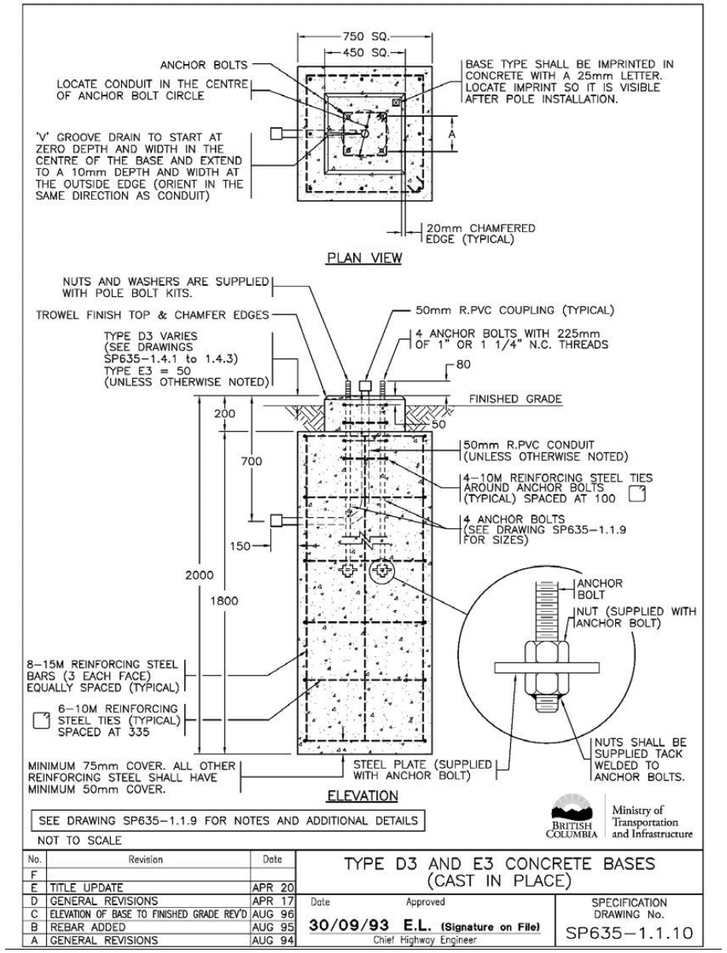

Tri-Kon Precast Products Ltd.

601 Patterson Street West
Cranbrook BC V1C 6T3

250-426-8162
info@trikonprecast.com
trikonprecast.com

DRAWING / PRODUCT NAME	CATALOG REFERENCE	SHEET
Type D3 and E3 Concrete Bases, Cast in Place (BC MoTI SP635-1.1.10)	TK-EL-012	12 / 36
DESCRIPTION	**SHEET FORMAT**	**UNITS / SCALE**
Original reference: Type D3 and E3 Concrete Bases, Cast in Place (BC MoTI SP635-1.1.10). Technical notes and source identification are preserved.	11 x 17 in / Landscape	As noted / Do not scale
APPROX. WEIGHT - SOURCE VALUES ONLY	**ORIGINAL SOURCE DATE**	**LAYOUT UPDATED ONLY**
See drawing / confirm with Tri-Kon; no weight estimated.	As recorded in original	2026-10-05

Technical content unchanged. Confirm specifications and handling weights with Tri-Kon. Project examples are not standard designs. Document layout: Built by Vision (BBV).

SECTION 635 ELECTRICAL AND SIGNING

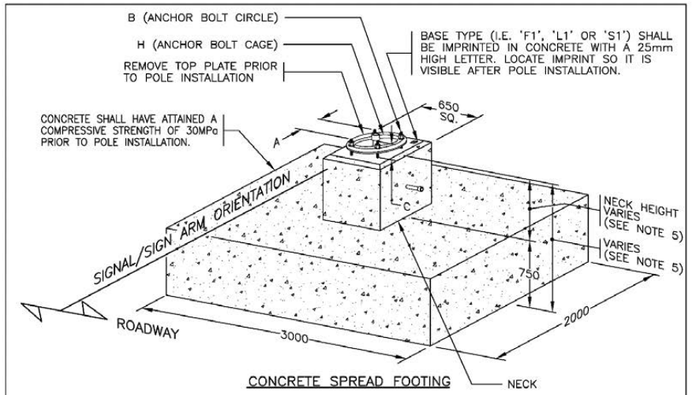

CONCRETE SPREAD FOOTING

BASE TYPE	POLE TYPE	VOLUME OF CONCRETE	MASS OF REBAR	APPROXIMATE MASS	FORMWORK	A	B	C	H (ANCHOR BOLTS)
F1	TYPE 6 AND 7 POLES	$5.0m^3$	455 kg*	12306 kg*	$11.0m^2$	243	343	160	4–1"ø x 48" (1220) GALVANIZED GRADE 150 DYWIDAG PRE–ASSEMBLED IN A CAGE
S1	TYPE S POLES	$5.0m^3$	455 kg*	12306 kg*	$11.0m^2$	243	343	160	4–1"ø x 48" (1220) GALVANIZED GRADE 150 DYWIDAG PRE–ASSEMBLED IN A CAGE
L1	TYPE L POLES	$5.0m^3$	455 kg*	12306 kg*	$11.0m^2$	276	390	140	4–1 1/2"ø x 54" (1370) GALVANIZED AISI / SAE 4140 PRE–ASSEMBLED IN A CAGE

NOTES

1. SEE STANDARD SPECIFICATIONS & SPECIAL PROVISIONS FOR ADDITIONAL INFORMATION.
2. SEE PLANS FOR SIGNAL/SIGN ARM ORIENTATION.
3. SEE DRAWINGS SP635–1.1.12, 1.1.13 & 1.4.5 FOR ADDITIONAL DETAILS.
4. ALL DIMENSIONS ARE IN MILLIMETRES UNLESS OTHERWISE NOTED.
5. NECK HEIGHT MAY VARY FROM 750 to 1400. SEE DRAWING SP635–1.4.5 FOR MORE INFORMATION.

BASE DESIGNED FOR SOILS WITH A MINIMUM BEARING PRESSURE OF 100KPa

NOT TO SCALE

BRITISH COLUMBIA Ministry of Transportation and Infrastructure

No.	Revision	Date
F		
E		
D		
C	TITLE UPDATE	APR 20
B	GENERAL REVISIONS	APR 17
A	TYPE S1 BASE ADDED	OCT 03

TYPE F1, L1 & S1 CONCRETE SPREAD FOOTINGS (CAST IN PLACE)

Date 15/11/95 Approved M.C. (Signature on File) Chief Highway Engineer

SPECIFICATION DRAWING No. SP635–1.1.11

Tri-Kon Precast Products Ltd.

601 Patterson Street West
Cranbrook BC V1C 6T3

250-426-8162
info@trikonprecast.com
trikonprecast.com

DRAWING / PRODUCT NAME	CATALOG REFERENCE	SHEET
Type F1, L1 & S1 Concrete Spread Footings (BC MoTI SP635-1.1.11)	TK-EL-013	13 / 36
DESCRIPTION	**SHEET FORMAT**	**UNITS / SCALE**
Original reference: Type F1, L1 & S1 Concrete Spread Footings (BC MoTI SP635-1.1.11). Technical notes and source identification are preserved.	11 x 17 in / Landscape	As noted / Do not scale
APPROX. WEIGHT - SOURCE VALUES ONLY	**ORIGINAL SOURCE DATE**	**LAYOUT UPDATED ONLY**
See drawing / confirm with Tri-Kon; no weight estimated.	As recorded in original	2026-10-05

Technical content unchanged. Confirm specifications and handling weights with Tri-Kon. Project examples are not standard designs. Document layout: Built by Vision (BBV).

SECTION 635 ELECTRICAL AND SIGNING

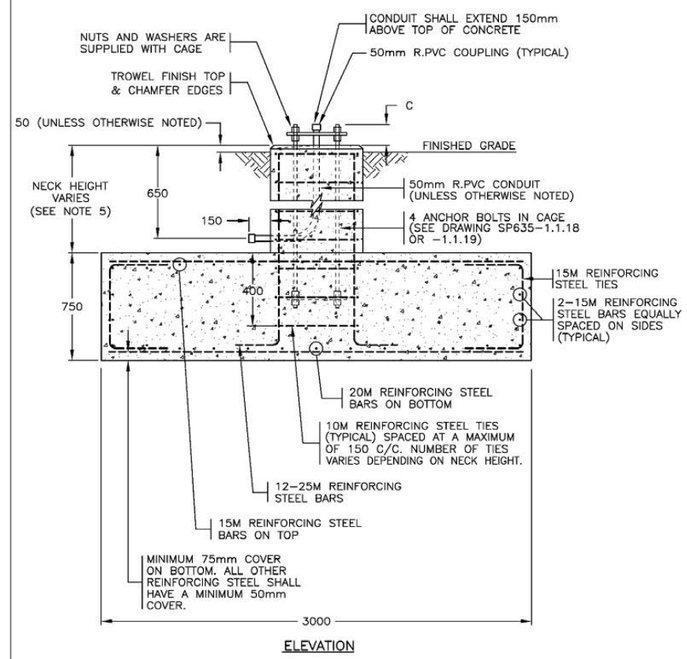

ELEVATION

SEE DRAWING SP635-1.1.11 FOR NOTES AND ADDITIONAL DETAILS

NOT TO SCALE

BRITISH COLUMBIA | Ministry of Transportation and Infrastructure

No.	Revision	Date
F		
E		
D	TITLE UPDATED	APR 20
C	GENERAL REVISIONS	APR 17
B	TYPE S1 BASE ADDED	OCT 03
A	ELEVATION OF BASE TO FINISHED GRADE REV'D	AUG 96

TYPE F1, L1 & S1 CONCRETE SPREAD FOOTINGS (CAST IN PLACE)

Date: 15/11/95 Approved: M.C. (Signature on File) Chief Highway Engineer

SPECIFICATION DRAWING No. SP635-1.1.12

Tri-Kon Precast Products Ltd.

601 Patterson Street West
Cranbrook BC V1C 6T3

250-426-8162
info@trikonprecast.com
trikonprecast.com

DRAWING / PRODUCT NAME	CATALOG REFERENCE	SHEET
Type F1, L1 & S1 Concrete Spread Footings (BC MoTI SP635-1.1.12)	TK-EL-014	14 / 36
DESCRIPTION	**SHEET FORMAT**	**UNITS / SCALE**
Original reference: Type F1, L1 & S1 Concrete Spread Footings (BC MoTI SP635-1.1.12). Technical notes and source identification are preserved.	11 x 17 in / Landscape	As noted / Do not scale
APPROX. WEIGHT - SOURCE VALUES ONLY	**ORIGINAL SOURCE DATE**	**LAYOUT UPDATED ONLY**
See drawing / confirm with Tri-Kon; no weight estimated.	As recorded in original	2026-10-05

Technical content unchanged. Confirm specifications and handling weights with Tri-Kon. Project examples are not standard designs. Document layout: Built by Vision (BBV).

SECTION 635 **ELECTRICAL AND SIGNING**

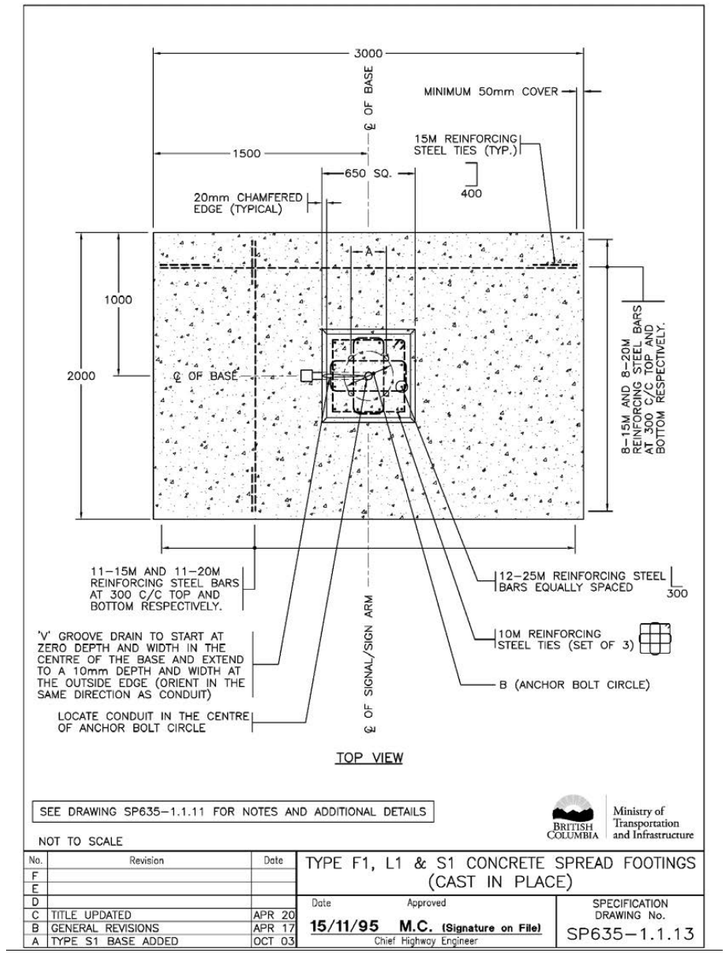

Tri-Kon Precast Products Ltd.

601 Patterson Street West
Cranbrook BC V1C 6T3

250-426-8162
info@trikonprecast.com
trikonprecast.com

DRAWING / PRODUCT NAME	CATALOG REFERENCE	SHEET
Type F1, L1 & S1 Concrete Spread Footings (BC MoTI SP635-1.1.13)	TK-EL-015	15 / 36
DESCRIPTION	**SHEET FORMAT**	**UNITS / SCALE**
Original reference: Type F1, L1 & S1 Concrete Spread Footings (BC MoTI SP635-1.1.13). Technical notes and source identification are preserved.	11 x 17 in / Landscape	As noted / Do not scale
APPROX. WEIGHT - SOURCE VALUES ONLY	**ORIGINAL SOURCE DATE**	**LAYOUT UPDATED ONLY**
See drawing / confirm with Tri-Kon; no weight estimated.	As recorded in original	2026-10-05

Technical content unchanged. Confirm specifications and handling weights with Tri-Kon. Project examples are not standard designs. Document layout: Built by Vision (BBV).

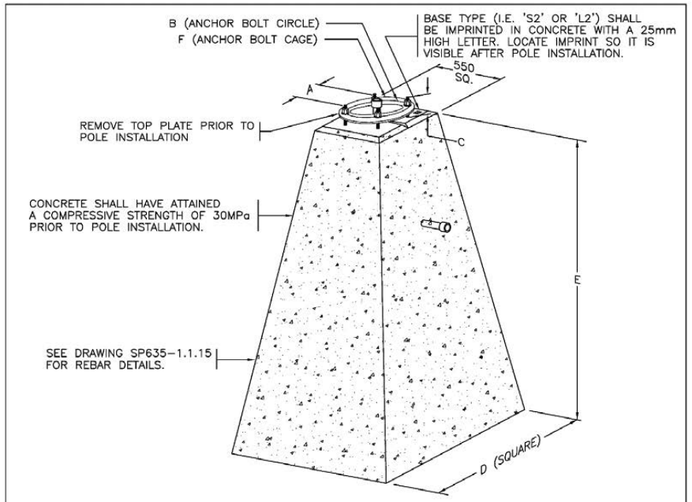

PRECAST CONCRETE BASES

BASE TYPE	POLE TYPE	APPROXIMATE MASS	VOLUME OF CONCRETE	A	B	C	D	E	F (ANCHOR BOLTS)
S2 F2	TYPE S, 6 AND 7 POLES	4500 kg	1.8 m^3	243	343	160	1240	2100	4–1"ø x 48" (1220) GALVANIZED GRADE 150 DYWIDAG PRE–ASSEMBLED IN A CAGE
L2	TYPE L POLES	5040 kg	2.0 m^3	276	390	140	1300	2300	4–1 1/2"ø x 54" (1370) GALVANIZED AISI/SAE 4140 PRE–ASSEMBLED IN A CAGE

NOTES

1. SEE STANDARD SPECIFICATIONS & SPECIAL PROVISIONS FOR ADDITIONAL INFORMATION.
2. ALL DIMENSIONS ARE IN MILLIMETRES UNLESS OTHERWISE NOTED.
3. SEE DRAWING SP635–1.1.15 FOR ADDITIONAL DETAILS.
4. SEE DRAWINGS SP635–1.4.1 TO 1.4.4 FOR BACKFILL REQUIREMENTS.

BRITISH COLUMBIA Ministry of Transportation and Infrastructure

NOT TO SCALE

No.	Revision	Date
F		
E	COMBINED S2 AND F2 BASE	APR 20
D	GENERAL REVISIONS	APR 17
C	TYPE S2 BASE ADDED	OCT 03
B	DRAWING NUMBER CHANGED	AUG 95
A	GENERAL REVISIONS	AUG 94

TYPE F2, L2 AND S2 CONCRETE BASES (PRECAST)

Date 30/09/93 Approved E.L. (Signature on File) Chief Highway Engineer

SPECIFICATION DRAWING No. SP635–1.1.14

Tri-Kon Precast Products Ltd.

601 Patterson Street West
Cranbrook BC V1C 6T3

250-426-8162
info@trikonprecast.com
trikonprecast.com

DRAWING / PRODUCT NAME	CATALOG REFERENCE	SHEET
Type F2, L2 and S2 Concrete Bases, Precast (BC MoTI SP635-1.1.14)	TK-EL-016	16 / 36
DESCRIPTION	**SHEET FORMAT**	**UNITS / SCALE**
Original reference: Type F2, L2 and S2 Concrete Bases, Precast (BC MoTI SP635-1.1.14). Technical notes and source identification are preserved.	11 x 17 in / Landscape	As noted / Do not scale
APPROX. WEIGHT - SOURCE VALUES ONLY	**ORIGINAL SOURCE DATE**	**LAYOUT UPDATED ONLY**
See drawing / confirm with Tri-Kon; no weight estimated.	As recorded in original	2026-10-05

Technical content unchanged. Confirm specifications and handling weights with Tri-Kon. Project examples are not standard designs. Document layout: Built by Vision (BBV).

SECTION 635 **ELECTRICAL AND SIGNING**

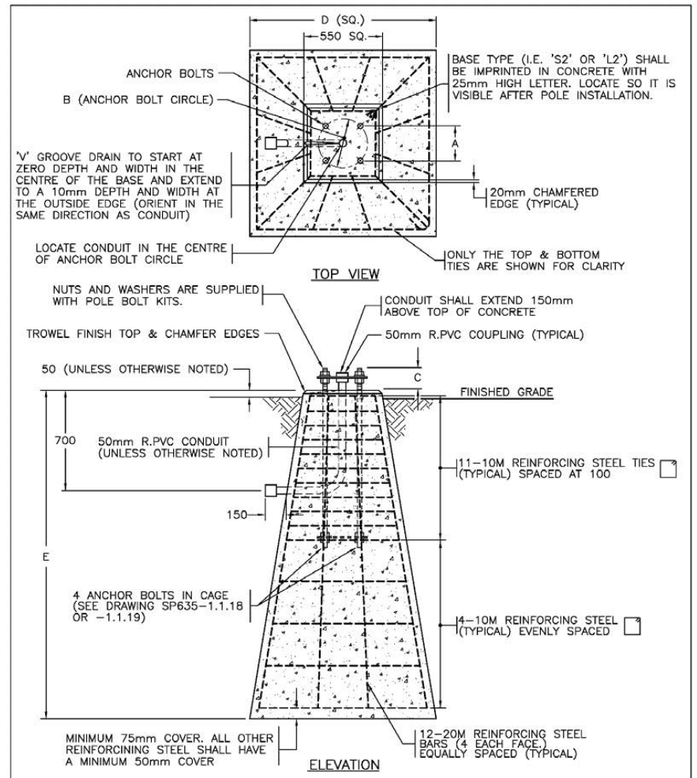

SEE DRAWING SP635-1.1.14 FOR NOTES AND ADDITIONAL DETAILS

NOT TO SCALE

BRITISH COLUMBIA — Ministry of Transportation and Infrastructure

No.	Revision	Date
F	COMBINED S2 AND F2 BASE	APR 20
E	GENERAL REVISIONS	APR 17
D	TYPE S2 BASE ADDED	OCT 03
C	ELEVATION OF BASE TO FINISHED GRADE REVISED	AUG 96
B	ELEVATION OF BASE TO FINISHED GRADE REVISED	AUG 95
A	GENERAL REVISIONS	AUG 94

TYPE F2, L2 AND S2 CONCRETE BASES (PRECAST)

Date Approved: 30/09/93 E.L. (Signature on File) — Chief Highway Engineer

SPECIFICATION DRAWING No. SP635-1.1.15

Tri-Kon Precast Products Ltd.

601 Patterson Street West
Cranbrook BC V1C 6T3

250-426-8162
info@trikonprecast.com
trikonprecast.com

DRAWING / PRODUCT NAME	CATALOG REFERENCE	SHEET
Type F2, L2 and S2 Concrete Bases, Precast (BC MoTI SP635-1.1.15)	TK-EL-017	17 / 36
DESCRIPTION	**SHEET FORMAT**	**UNITS / SCALE**
Original reference: Type F2, L2 and S2 Concrete Bases, Precast (BC MoTI SP635-1.1.15). Technical notes and source identification are preserved.	11 x 17 in / Landscape	As noted / Do not scale
APPROX. WEIGHT - SOURCE VALUES ONLY	**ORIGINAL SOURCE DATE**	**LAYOUT UPDATED ONLY**
See drawing / confirm with Tri-Kon; no weight estimated.	As recorded in original	2026-10-05

Technical content unchanged. Confirm specifications and handling weights with Tri-Kon. Project examples are not standard designs. Document layout: Built by Vision (BBV).

SECTION 635 ELECTRICAL AND SIGNING

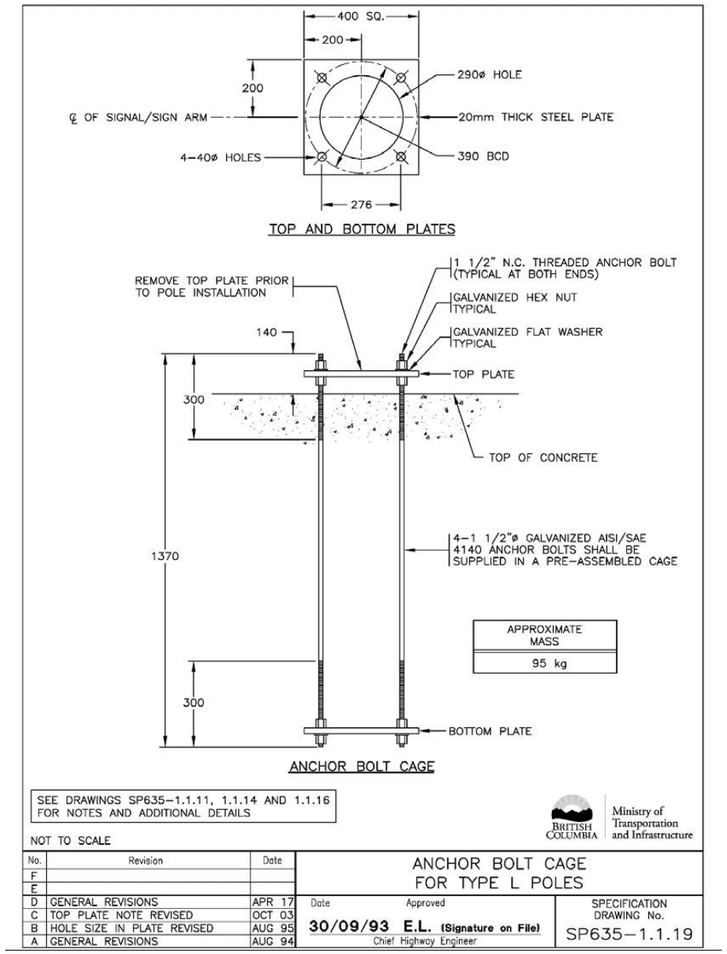

No.	Revision	Date
F		
E		
D	GENERAL REVISIONS	APR 17
C	TOP PLATE NOTE REVISED	OCT 03
B	HOLE SIZE IN PLATE REVISED	AUG 95
A	GENERAL REVISIONS	AUG 94

Tri-Kon Precast Products Ltd.

601 Patterson Street West
Cranbrook BC V1C 6T3

250-426-8162
info@trikonprecast.com
trikonprecast.com

DRAWING / PRODUCT NAME	CATALOG REFERENCE	SHEET
Anchor Bolt Cage for Type L Poles (BC MoTI SP635-1.1.19)	TK-EL-018	18 / 36
DESCRIPTION	**SHEET FORMAT**	**UNITS / SCALE**
Original reference: Anchor Bolt Cage for Type L Poles (BC MoTI SP635-1.1.19). Technical notes and source identification are preserved.	11 x 17 in / Landscape	As noted / Do not scale
APPROX. WEIGHT - SOURCE VALUES ONLY	**ORIGINAL SOURCE DATE**	**LAYOUT UPDATED ONLY**
See drawing / confirm with Tri-Kon; no weight estimated.	As recorded in original	2026-10-05

Technical content unchanged. Confirm specifications and handling weights with Tri-Kon. Project examples are not standard designs. Document layout: Built by Vision (BBV).

SECTION 635 **ELECTRICAL AND SIGNING**

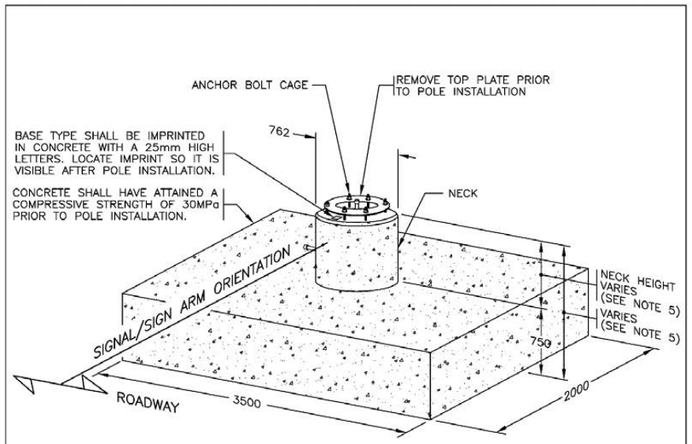

CONCRETE SPREAD FOOTING

BASE TYPE	POLE TYPE	VOLUME OF CONCRETE	MASS OF REBAR	FORMWORK	APPROXIMATE MASS
M1	TYPE M POLES	5.90 m^3 *	540 kg *	11.6 m^2 *	14400 kg *

(*) BASED ON SPREAD FOOTING WITH 1400 HIGH NECK

NOTES

1. SEE STANDARD SPECIFICATIONS & SPECIAL PROVISIONS FOR ADDITIONAL INFORMATION.
2. SEE PLANS FOR SIGNAL/SIGN ARM ORIENTATION.
3. SEE DRAWINGS SP635–1.1.21, 1.1.22 & 1.4.5 FOR ADDITIONAL DETAILS.
4. ALL DIMENSIONS ARE IN MILLIMETRES UNLESS OTHERWISE NOTED.
5. NECK HEIGHT MAY VARY FROM 750 to 2000. SEE DRAWING SP635–1.4.5 FOR MORE INFORMATION.

BASE DESIGNED FOR SOILS WITH A MINIMUM BEARING PRESSURE OF 100KPa

BRITISH COLUMBIA Ministry of Transportation and Infrastructure

NOT TO SCALE

No.	Revision	Date
F		
E	TITLE UPDATED	APR 20
D	GENERAL REVISIONS	APR 17
C	NECK HEIGHT REVISED	AUG 96
B	NECK HEIGHT REVISED & REBAR ADDED	AUG 95
A	GENERAL REVISIONS	AUG 94

TYPE M1 CONCRETE SPREAD FOOTING (CAST IN PLACE)

Date Approved: 30/09/93 E.L. (Signature on File) Chief Highway Engineer

SPECIFICATION DRAWING No. SP635–1.1.20

Tri-Kon Precast Products Ltd.

601 Patterson Street West
Cranbrook BC V1C 6T3

250-426-8162
info@trikonprecast.com
trikonprecast.com

DRAWING / PRODUCT NAME	CATALOG REFERENCE	SHEET
Type M1 Concrete Spread Footing (BC MoTI SP635-1.1.20)	TK-EL-019	19 / 36
DESCRIPTION	**SHEET FORMAT**	**UNITS / SCALE**
Original reference: Type M1 Concrete Spread Footing (BC MoTI SP635-1.1.20). Technical notes and source identification are preserved.	11 x 17 in / Landscape	As noted / Do not scale
APPROX. WEIGHT - SOURCE VALUES ONLY	**ORIGINAL SOURCE DATE**	**LAYOUT UPDATED ONLY**
See drawing / confirm with Tri-Kon; no weight estimated.	As recorded in original	2026-10-05

Technical content unchanged. Confirm specifications and handling weights with Tri-Kon. Project examples are not standard designs. Document layout: Built by Vision (BBV).

SECTION 635 **ELECTRICAL AND SIGNING**

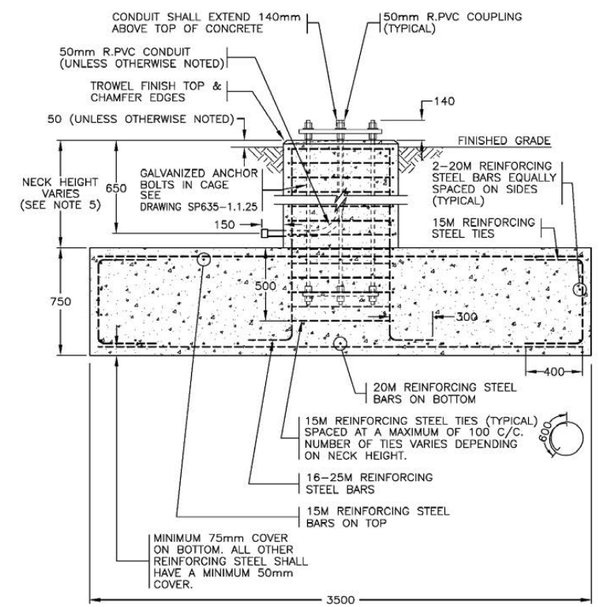

ELEVATION

SEE DRAWING SP635-1.1.20 FOR NOTES AND ADDITIONAL DETAILS

NOT TO SCALE

BRITISH COLUMBIA — Ministry of Transportation and Infrastructure

No.	Revision	Date
F		
E	TITLE UPDATED	APR 20
D	GENERAL REVISIONS	APR 17
C	REBAR IN NECK & BASE ELEVATION REVISED	AUG 96
B	NECK HEIGHT REVISED & REBAR ADDED	AUG 95
A	GENERAL REVISIONS	AUG 94

TYPE M1 CONCRETE SPREAD FOOTING (CAST IN PLACE)

Date Approved: 30/09/93 E.L. (Signature on File) Chief Highway Engineer

SPECIFICATION DRAWING No. SP635-1.1.21

Tri-Kon Precast Products Ltd.

601 Patterson Street West
Cranbrook BC V1C 6T3

250-426-8162
info@trikonprecast.com
trikonprecast.com

DRAWING / PRODUCT NAME	CATALOG REFERENCE	SHEET
Type M1 Concrete Spread Footing (BC MoTI SP635-1.1.21)	TK-EL-020	20 / 36
DESCRIPTION	**SHEET FORMAT**	**UNITS / SCALE**
Original reference: Type M1 Concrete Spread Footing (BC MoTI SP635-1.1.21). Technical notes and source identification are preserved.	11 x 17 in / Landscape	As noted / Do not scale
APPROX. WEIGHT - SOURCE VALUES ONLY	**ORIGINAL SOURCE DATE**	**LAYOUT UPDATED ONLY**
See drawing / confirm with Tri-Kon; no weight estimated.	As recorded in original	2026-10-05

Technical content unchanged. Confirm specifications and handling weights with Tri-Kon. Project examples are not standard designs. Document layout: Built by Vision (BBV).

SECTION 635 **ELECTRICAL AND SIGNING**

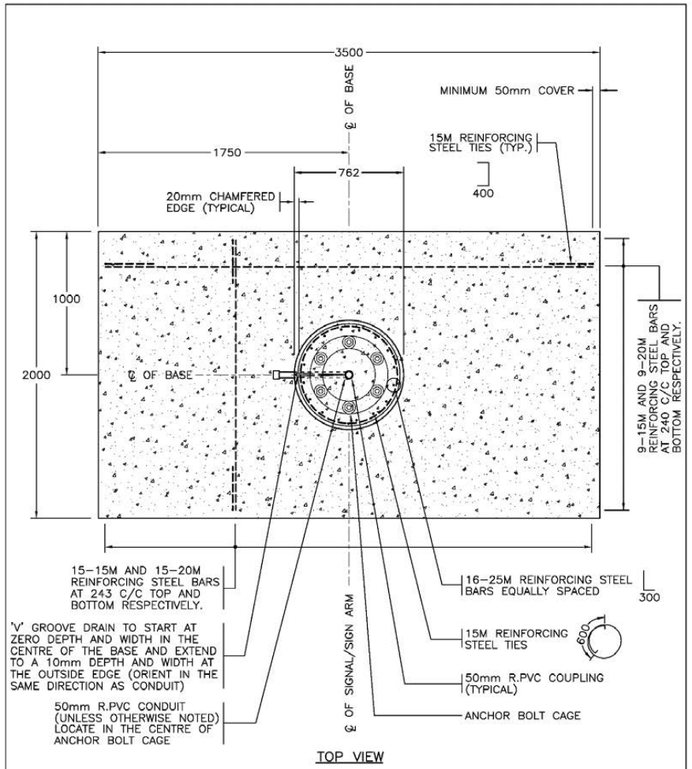

SEE DRAWING SP635–1.1.20 FOR NOTES AND ADDITIONAL DETAILS

NOT TO SCALE

BRITISH COLUMBIA | Ministry of Transportation and Infrastructure

No.	Revision	Date
F		
E		
D	TITLE UPDATED	APR 17
C	GENERAL REVISIONS	APR 17
B	LENGTH REVISED & REBAR ADDED	AUG 95
A	GENERAL REVISIONS	AUG 94

TYPE M1 CONCRETE SPREAD FOOTING (CAST IN PLACE)

Date Approved: 30/09/93 E.L. (Signature on File) Chief Highway Engineer

SPECIFICATION DRAWING No. SP635–1.1.22

Tri-Kon Precast Products Ltd.

601 Patterson Street West
Cranbrook BC V1C 6T3

250-426-8162
info@trikonprecast.com
trikonprecast.com

DRAWING / PRODUCT NAME	CATALOG REFERENCE	SHEET
Type M1 Concrete Spread Footing (BC MoTI SP635-1.1.22)	TK-EL-021	21 / 36
DESCRIPTION	**SHEET FORMAT**	**UNITS / SCALE**
Original reference: Type M1 Concrete Spread Footing (BC MoTI SP635-1.1.22). Technical notes and source identification are preserved.	11 x 17 in / Landscape	As noted / Do not scale
APPROX. WEIGHT - SOURCE VALUES ONLY	**ORIGINAL SOURCE DATE**	**LAYOUT UPDATED ONLY**
See drawing / confirm with Tri-Kon; no weight estimated.	As recorded in original	2026-10-05

Technical content unchanged. Confirm specifications and handling weights with Tri-Kon. Project examples are not standard designs. Document layout: Built by Vision (BBV).

SECTION 635 **ELECTRICAL AND SIGNING**

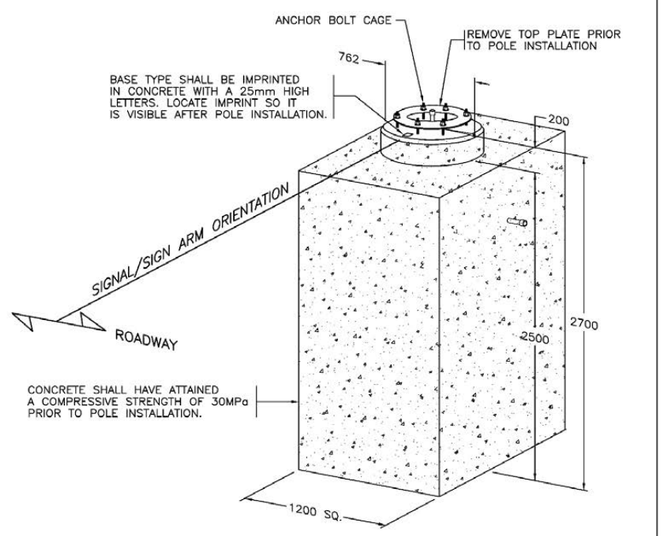

CONCRETE BASE

BASE TYPE	POLE TYPE	VOLUME OF CONCRETE	MASS OF REBAR	FORMWORK	APPROXIMATE MASS
M2	TYPE M POLES	3.7 m^3	100 kg	12.5 m^2	8935 kg

NOTES

1. SEE STANDARD SPECIFICATIONS & SPECIAL PROVISIONS FOR ADDITIONAL INFORMATION.
2. SEE PLANS FOR SIGNAL/SIGN ARM ORIENTATION.
3. SEE DRAWINGS SP635–1.1.24 & 1.4.1 to 1.4.4 FOR ADDITIONAL DETAILS.
4. ALL DIMENSIONS ARE IN MILLIMETRES UNLESS OTHERWISE NOTED.
5. SEE DRAWINGS SP635–1.4.1 TO 1.4.4 FOR BACKFILL REQUIREMENTS.

NOT TO SCALE

BRITISH COLUMBIA | Ministry of Transportation and Infrastructure

No.	Revision	Date
F		
E	TITLE UPDATED	APR 20
D	GENERAL REVISIONS	APR 17
C	NOTE 4 REVISED	AUG 96
B	NOTE 4 REVISED	AUG 95
A	GENERAL REVISIONS	AUG 94

TYPE M2 CONCRETE BASE (CAST IN PLACE)

Date Approved: 30/09/93 E.L. (Signature on File) Chief Highway Engineer

SPECIFICATION DRAWING No. SP635–1.1.23

Tri-Kon Precast Products Ltd.

601 Patterson Street West
Cranbrook BC V1C 6T3

250-426-8162
info@trikonprecast.com
trikonprecast.com

DRAWING / PRODUCT NAME	CATALOG REFERENCE	SHEET
Type M2 Concrete Base, Cast in Place (BC MoTI SP635-1.1.23)	TK-EL-022	22 / 36
DESCRIPTION	**SHEET FORMAT**	**UNITS / SCALE**
Original reference: Type M2 Concrete Base, Cast in Place (BC MoTI SP635-1.1.23). Technical notes and source identification are preserved.	11 x 17 in / Landscape	As noted / Do not scale
APPROX. WEIGHT - SOURCE VALUES ONLY	**ORIGINAL SOURCE DATE**	**LAYOUT UPDATED ONLY**
See drawing / confirm with Tri-Kon; no weight estimated.	As recorded in original	2026-10-05

Technical content unchanged. Confirm specifications and handling weights with Tri-Kon. Project examples are not standard designs. Document layout: Built by Vision (BBV).

SECTION 635 **ELECTRICAL AND SIGNING**

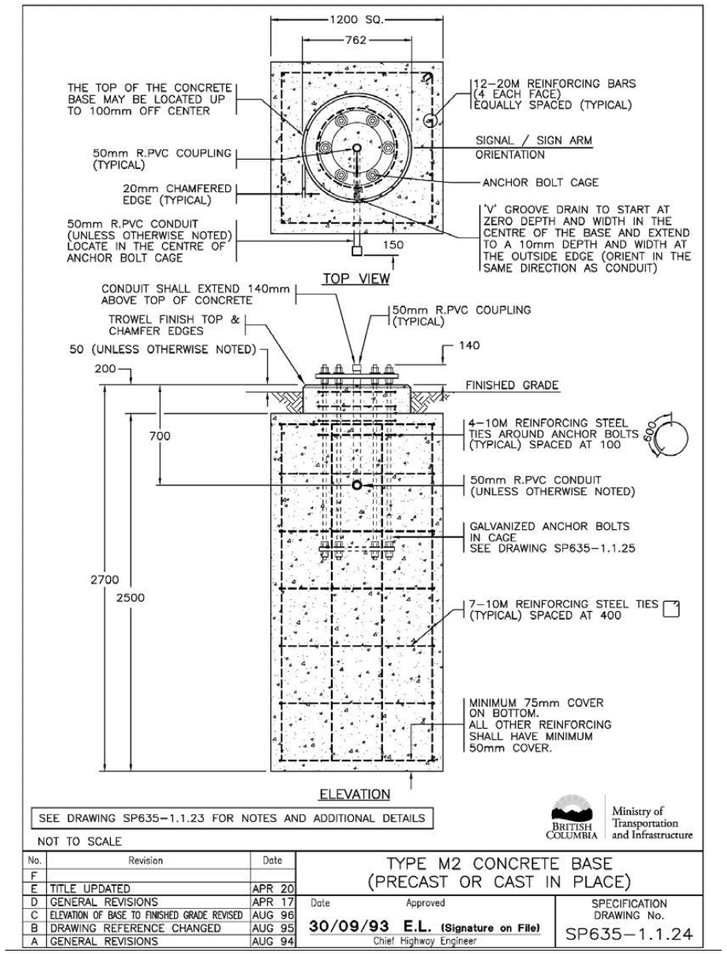

SEE DRAWING SP635–1.1.23 FOR NOTES AND ADDITIONAL DETAILS

NOT TO SCALE

BRITISH COLUMBIA — Ministry of Transportation and Infrastructure

No.	Revision	Date
F		
E	TITLE UPDATED	APR 20
D	GENERAL REVISIONS	APR 17
C	ELEVATION OF BASE TO FINISHED GRADE REVISED	AUG 96
B	DRAWING REFERENCE CHANGED	AUG 95
A	GENERAL REVISIONS	AUG 94

TYPE M2 CONCRETE BASE (PRECAST OR CAST IN PLACE)

Date: 30/09/93 — Approved: E.L. (Signature on File), Chief Highway Engineer

SPECIFICATION DRAWING No. SP635–1.1.24

Tri-Kon Precast Products Ltd.

601 Patterson Street West
Cranbrook BC V1C 6T3

250-426-8162
info@trikonprecast.com
trikonprecast.com

DRAWING / PRODUCT NAME	CATALOG REFERENCE	SHEET
Type M2 Concrete Base, Precast or Cast in Place (BC MoTI SP635-1.1.24)	TK-EL-023	23 / 36
DESCRIPTION	**SHEET FORMAT**	**UNITS / SCALE**
Original reference: Type M2 Concrete Base, Precast or Cast in Place (BC MoTI SP635-1.1.24). Technical notes and source identification are preserved.	11 x 17 in / Landscape	As noted / Do not scale
APPROX. WEIGHT - SOURCE VALUES ONLY	**ORIGINAL SOURCE DATE**	**LAYOUT UPDATED ONLY**
See drawing / confirm with Tri-Kon; no weight estimated.	As recorded in original	2026-10-05

Technical content unchanged. Confirm specifications and handling weights with Tri-Kon. Project examples are not standard designs. Document layout: Built by Vision (BBV).

SECTION 635 **ELECTRICAL AND SIGNING**

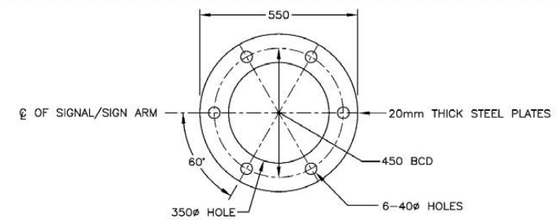

TOP AND BOTTOM PLATES

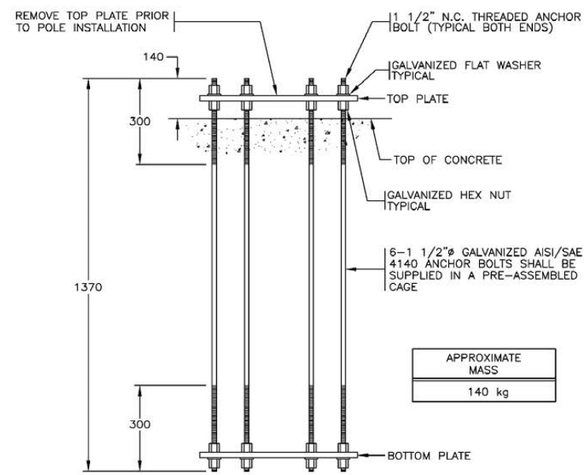

ANCHOR BOLT CAGE

SEE DRAWINGS SP635–1.1.20 AND 1.1.23 FOR NOTES AND ADDITIONAL DETAILS

NOT TO SCALE

British Columbia — Ministry of Transportation and Infrastructure

No.	Revision	Date
F		
E		
D	GENERAL REVISIONS	APR 17
C	TOP PLATE NOTE REVISED	OCT 03
B	HOLE SIZE IN PLATE REVISED	AUG 95
A	GENERAL REVISIONS	AUG 94

ANCHOR BOLT CAGE FOR TYPE M POLES

Date Approved: 30/09/93 E.L. (Signature on File) — Chief Highway Engineer

SPECIFICATION DRAWING No. SP635–1.1.25

Tri-Kon Precast Products Ltd.

601 Patterson Street West
Cranbrook BC V1C 6T3

250-426-8162
info@trikonprecast.com
trikonprecast.com

DRAWING / PRODUCT NAME	CATALOG REFERENCE	SHEET
Anchor Bolt Cage for Type M Poles (BC MoTI SP635-1.1.25)	TK-EL-024	24 / 36
DESCRIPTION	**SHEET FORMAT**	**UNITS / SCALE**
Original reference: Anchor Bolt Cage for Type M Poles (BC MoTI SP635-1.1.25). Technical notes and source identification are preserved.	11 x 17 in / Landscape	As noted / Do not scale
APPROX. WEIGHT - SOURCE VALUES ONLY	**ORIGINAL SOURCE DATE**	**LAYOUT UPDATED ONLY**
See drawing / confirm with Tri-Kon; no weight estimated.	As recorded in original	2026-10-05

Technical content unchanged. Confirm specifications and handling weights with Tri-Kon. Project examples are not standard designs. Document layout: Built by Vision (BBV).

SECTION 635 **ELECTRICAL AND SIGNING**

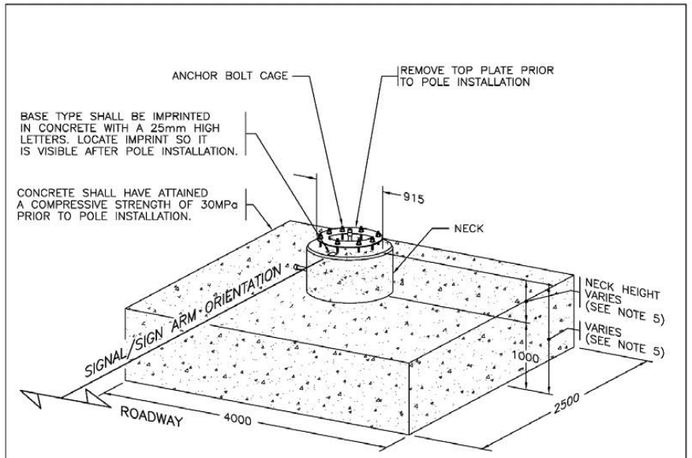

CONCRETE SPREAD FOOTING

BASE TYPE	POLE TYPE	VOLUME OF CONCRETE	MASS OF REBAR	FORMWORK	APPROXIMATE MASS
H1	TYPE H POLES	10.9 m^3 *	760 kg *	17.0 m^2*	26700 kg*

(*) BASED ON SPREAD FOOTING WITH 1400 HIGH NECK

NOTES

1. SEE STANDARD SPECIFICATIONS & SPECIAL PROVISIONS FOR ADDITIONAL INFORMATION.
2. SEE PLANS FOR SIGN ARM ORIENTATION.
3. SEE DRAWINGS SP635–1.1.27, 1.1.28 & 1.4.5 FOR ADDITIONAL DETAILS.
4. ALL DIMENSIONS ARE IN MILLIMETRES UNLESS OTHERWISE NOTED.
5. NECK HEIGHT MAY VARY FROM 750 to 2500. SEE DRAWING SP635–1.4.5 FOR MORE INFORMATION.

BASE DESIGNED FOR SOILS WITH A MINIMUM BEARING PRESSURE OF 100KPa

BRITISH COLUMBIA Ministry of Transportation and Infrastructure

NOT TO SCALE

No.	Revision	Date
F		
E	TITLE UPDATED	APR 20
D	GENERAL REVISIONS	APR 17
C	NECK HEIGHT REVISED	AUG 96
B	NECK HEIGHT REVISED & REBAR ADDED	AUG 95
A	GENERAL REVISIONS	AUG 94

TYPE H1 CONCRETE SPREAD FOOTING (CAST IN PLACE)

Date Approved: 30/09/93 E.L. (Signature on File) Chief Highway Engineer

SPECIFICATION DRAWING No. SP635–1.1.26

Tri-Kon Precast Products Ltd.

601 Patterson Street West
Cranbrook BC V1C 6T3

250-426-8162
info@trikonprecast.com
trikonprecast.com

DRAWING / PRODUCT NAME	CATALOG REFERENCE	SHEET
Type H1 Concrete Spread Footing (BC MoTI SP635-1.1.26)	TK-EL-025	25 / 36
DESCRIPTION	**SHEET FORMAT**	**UNITS / SCALE**
Original reference: Type H1 Concrete Spread Footing (BC MoTI SP635-1.1.26). Technical notes and source identification are preserved.	11 x 17 in / Landscape	As noted / Do not scale
APPROX. WEIGHT - SOURCE VALUES ONLY	**ORIGINAL SOURCE DATE**	**LAYOUT UPDATED ONLY**
See drawing / confirm with Tri-Kon; no weight estimated.	As recorded in original	2026-10-05

Technical content unchanged. Confirm specifications and handling weights with Tri-Kon. Project examples are not standard designs. Document layout: Built by Vision (BBV).

SECTION 635 **ELECTRICAL AND SIGNING**

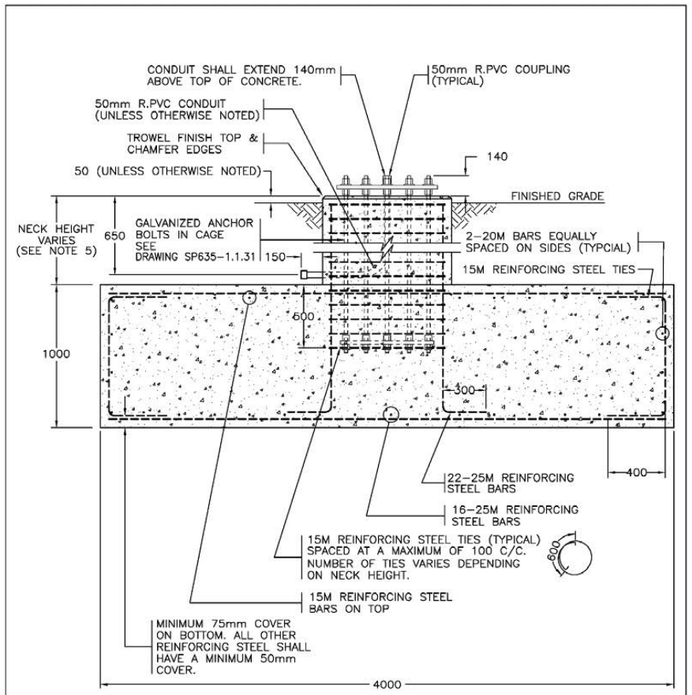

SIDE VIEW

SEE DRAWING SP635-1.1.26 FOR NOTES AND ADDITIONAL DETAILS

NOT TO SCALE

BRITISH COLUMBIA | Ministry of Transportation and Infrastructure

No.	Revision	Date
F	TITLE UPDATED	APR 20
E	GENERAL REVISIONS	APR 17
D	BOTTOM REBAR REVISED	FEB 12
C	REBAR IN NECK & BASE ELEVATION REVISED	AUG 96
B	NECK HEIGHT REVISED & REBAR ADDED	AUG 95
A	GENERAL REVISIONS	AUG 94

TYPE H1 CONCRETE SPREAD FOOTING (POURED IN PLACE)

Date Approved: 30/09/93 E.L. (Signature on File) Chief Highway Engineer

SPECIFICATION DRAWING No. SP635-1.1.27

Tri-Kon Precast Products Ltd.

601 Patterson Street West
Cranbrook BC V1C 6T3

250-426-8162
info@trikonprecast.com
trikonprecast.com

DRAWING / PRODUCT NAME	CATALOG REFERENCE	SHEET
Type H1 Concrete Spread Footing (BC MoTI SP635-1.1.27)	TK-EL-026	26 / 36
DESCRIPTION	**SHEET FORMAT**	**UNITS / SCALE**
Original reference: Type H1 Concrete Spread Footing (BC MoTI SP635-1.1.27). Technical notes and source identification are preserved.	11 x 17 in / Landscape	As noted / Do not scale
APPROX. WEIGHT - SOURCE VALUES ONLY	**ORIGINAL SOURCE DATE**	**LAYOUT UPDATED ONLY**
See drawing / confirm with Tri-Kon; no weight estimated.	As recorded in original	2026-10-05

Technical content unchanged. Confirm specifications and handling weights with Tri-Kon. Project examples are not standard designs. Document layout: Built by Vision (BBV).

SECTION 635 **ELECTRICAL AND SIGNING**

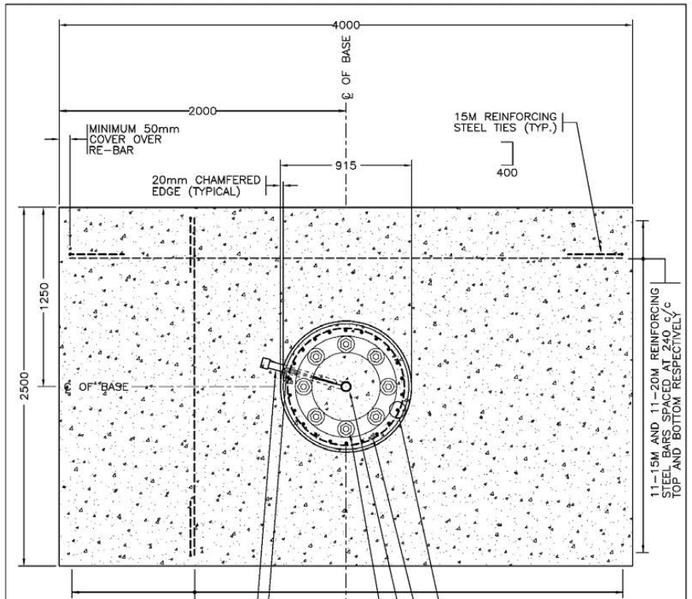

SEE DRAWING SP635-1.1.26 FOR NOTES AND ADDITIONAL DETAILS

NOT TO SCALE

BRITISH COLUMBIA Ministry of Transportation and Infrastructure

No.	Revision	Date
F		
E		
D	TITLE UPDATED	APR 20
C	GENERAL REVISIONS	APR 17
B	REBAR ADDED	AUG 95
A	GENERAL REVISIONS	AUG 94

TYPE H1 CONCRETE SPREAD FOOTING (CAST IN PLACE)

Date Approved: 30/09/93 E.L. (Signature on File) Chief Highway Engineer

SPECIFICATION DRAWING No. SP635-1.1.28

Tri-Kon Precast Products Ltd.

601 Patterson Street West
Cranbrook BC V1C 6T3

250-426-8162
info@trikonprecast.com
trikonprecast.com

DRAWING / PRODUCT NAME	CATALOG REFERENCE	SHEET
Type H1 Concrete Spread Footing (BC MoTI SP635-1.1.28)	TK-EL-027	27 / 36
DESCRIPTION	**SHEET FORMAT**	**UNITS / SCALE**
Original reference: Type H1 Concrete Spread Footing (BC MoTI SP635-1.1.28). Technical notes and source identification are preserved.	11 x 17 in / Landscape	As noted / Do not scale
APPROX. WEIGHT - SOURCE VALUES ONLY	**ORIGINAL SOURCE DATE**	**LAYOUT UPDATED ONLY**
See drawing / confirm with Tri-Kon; no weight estimated.	As recorded in original	2026-10-05

Technical content unchanged. Confirm specifications and handling weights with Tri-Kon. Project examples are not standard designs. Document layout: Built by Vision (BBV).

SECTION 635 ELECTRICAL AND SIGNING

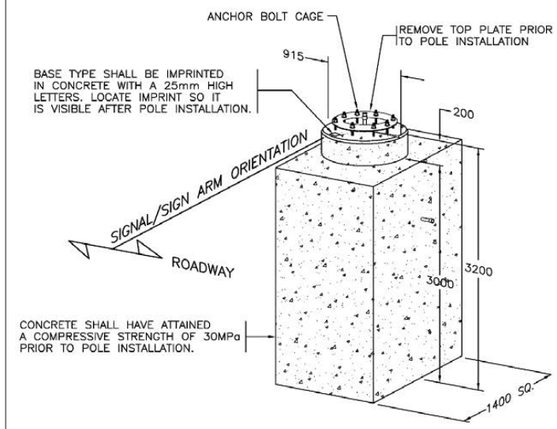

CONCRETE BASE

BASE TYPE	POLE TYPE	VOLUME OF CONCRETE	MASS OF REBAR	FORMWORK	APPROXIMATE MASS
H2	TYPE H POLES	6.0 m^3	155 kg	17.4 m^2	14445 kg

NOTES

1. SEE STANDARD SPECIFICATIONS & SPECIAL PROVISIONS FOR ADDITIONAL INFORMATION.
2. SEE PLANS FOR SIGN ARM ORIENTATION.
3. SEE DRAWINGS SP635–1.1.30 & 1.4.1 to 1.4.3 FOR ADDITIONAL DETAILS.
4. ALL DIMENSIONS ARE IN MILLIMETRES UNLESS OTHERWISE NOTED.
5. SEE DRAWINGS SP635–1.4.1 TO 1.4.4 FOR BACKFILL REQUIREMENTS.

NOT TO SCALE

BRITISH COLUMBIA Ministry of Transportation and Infrastructure

No.	Revision	Date
F		
E	TITLE UPDATED	APR 20
D	GENERAL REVISIONS	APR 17
C	NOTE 4 REVISED	AUG 96
B	NOTE 4 REVISED	AUG 95
A	GENERAL REVISIONS	AUG 94

TYPE H2 CONCRETE BASE (PRECAST OR CAST IN PLACE)

Date: 30/09/93 Approved: E.L. (Signature on File) Chief Highway Engineer

SPECIFICATION DRAWING No. SP635–1.1.29

Tri-Kon Precast Products Ltd.

601 Patterson Street West
Cranbrook BC V1C 6T3

250-426-8162
info@trikonprecast.com
trikonprecast.com

DRAWING / PRODUCT NAME	CATALOG REFERENCE	SHEET
Type H2 Concrete Base, Precast or Cast in Place (BC MoTI SP635-1.1.29)	TK-EL-028	28 / 36
DESCRIPTION	**SHEET FORMAT**	**UNITS / SCALE**
Original reference: Type H2 Concrete Base, Precast or Cast in Place (BC MoTI SP635-1.1.29). Technical notes and source identification are preserved.	11 x 17 in / Landscape	As noted / Do not scale
APPROX. WEIGHT - SOURCE VALUES ONLY	**ORIGINAL SOURCE DATE**	**LAYOUT UPDATED ONLY**
See drawing / confirm with Tri-Kon; no weight estimated.	As recorded in original	2026-10-05

Technical content unchanged. Confirm specifications and handling weights with Tri-Kon. Project examples are not standard designs. Document layout: Built by Vision (BBV).

SECTION 635 **ELECTRICAL AND SIGNING**

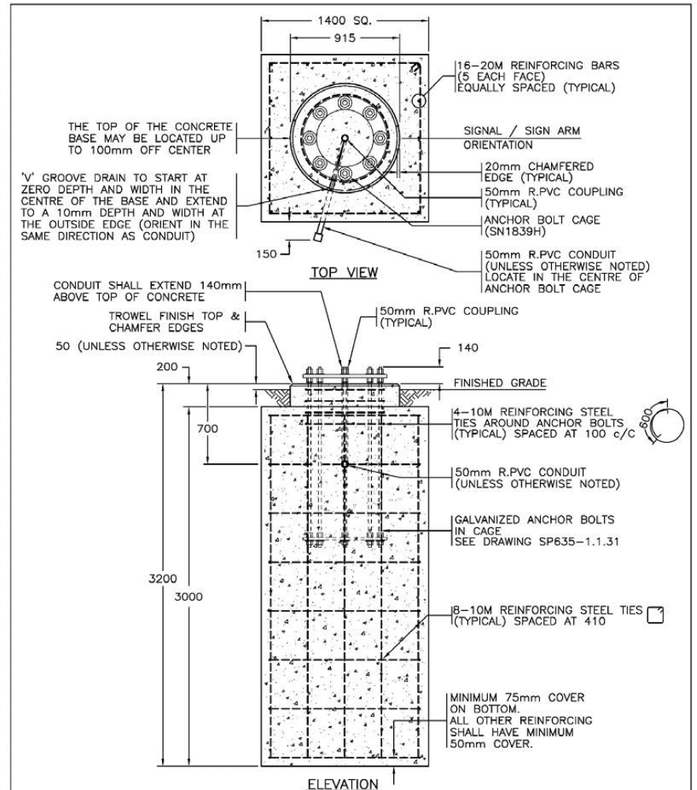

SEE DRAWING SP635–1.1.29 FOR NOTES AND ADDITIONAL DETAILS

NOT TO SCALE

BRITISH COLUMBIA — Ministry of Transportation and Infrastructure

No.	Revision	Date
F		
E	TITLE UPDATED	APR 20
D	GENERAL REVISIONS	APR 17
C	ELEVATION OF BASE TO FINISHED GRADE REVISED	AUG 96
B	DRAWING REFERENCE CHANGED	AUG 95
A	GENERAL REVISIONS	AUG 94

TYPE H2 CONCRETE BASE (CAST IN PLACE)

Date Approved: 30/09/93 E.L. (Signature on File) — Chief Highway Engineer

SPECIFICATION DRAWING No. SP635–1.1.30

Tri-Kon Precast Products Ltd.

601 Patterson Street West
Cranbrook BC V1C 6T3

250-426-8162
info@trikonprecast.com
trikonprecast.com

DRAWING / PRODUCT NAME	CATALOG REFERENCE	SHEET
Type H2 Concrete Base, Cast in Place (BC MoTI SP635-1.1.30)	TK-EL-029	29 / 36
DESCRIPTION	**SHEET FORMAT**	**UNITS / SCALE**
Original reference: Type H2 Concrete Base, Cast in Place (BC MoTI SP635-1.1.30). Technical notes and source identification are preserved.	11 x 17 in / Landscape	As noted / Do not scale
APPROX. WEIGHT - SOURCE VALUES ONLY	**ORIGINAL SOURCE DATE**	**LAYOUT UPDATED ONLY**
See drawing / confirm with Tri-Kon; no weight estimated.	As recorded in original	2026-10-05

Technical content unchanged. Confirm specifications and handling weights with Tri-Kon. Project examples are not standard designs. Document layout: Built by Vision (BBV).

SECTION 635 **ELECTRICAL AND SIGNING**

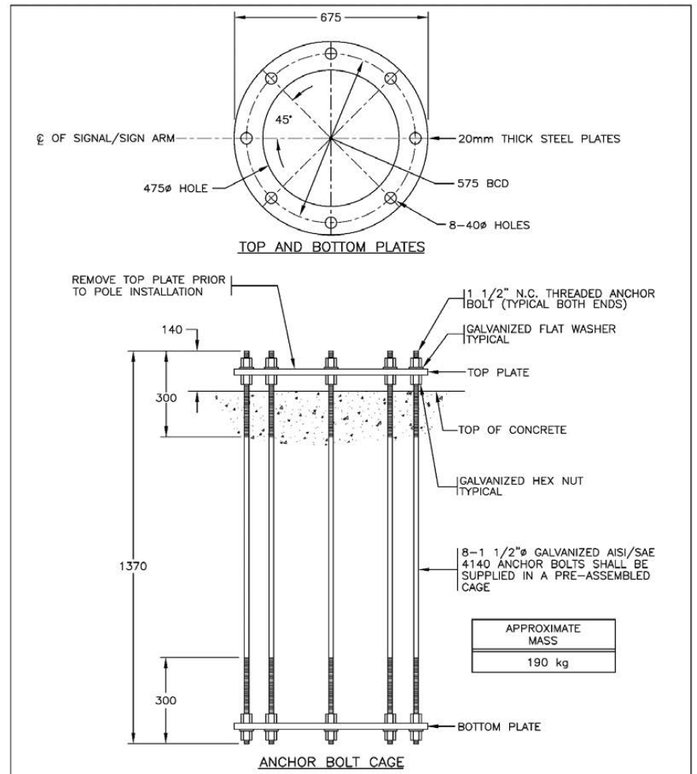

SEE DRAWINGS SP635–1.1.26 AND –1.1.29 FOR NOTES AND ADDITIONAL DETAILS

NOT TO SCALE

British Columbia — Ministry of Transportation and Infrastructure

No.	Revision	Date
F		
E		
D	GENERAL REVISIONS	APR 17
C	TOP PLATE NOTE REVISED	OCT 03
B	HOLE SIZE IN PLATE REVISED	AUG 95
A	GENERAL REVISIONS	AUG 94

ANCHOR BOLT CAGE FOR TYPE H POLES

Date Approved: 30/09/93 E.L. (Signature on File) Chief Highway Engineer

SPECIFICATION DRAWING No. SP635–1.1.31

Tri-Kon Precast Products Ltd.

601 Patterson Street West
Cranbrook BC V1C 6T3

250-426-8162
info@trikonprecast.com
trikonprecast.com

DRAWING / PRODUCT NAME	CATALOG REFERENCE	SHEET
Anchor Bolt Cage for Type H Poles (BC MoTI SP635-1.1.31)	TK-EL-030	30 / 36
DESCRIPTION	**SHEET FORMAT**	**UNITS / SCALE**
Original reference: Anchor Bolt Cage for Type H Poles (BC MoTI SP635-1.1.31). Technical notes and source identification are preserved.	11 x 17 in / Landscape	As noted / Do not scale
APPROX. WEIGHT - SOURCE VALUES ONLY	**ORIGINAL SOURCE DATE**	**LAYOUT UPDATED ONLY**
See drawing / confirm with Tri-Kon; no weight estimated.	As recorded in original	2026-10-05

Technical content unchanged. Confirm specifications and handling weights with Tri-Kon. Project examples are not standard designs. Document layout: Built by Vision (BBV).

SECTION 635 **ELECTRICAL AND SIGNING**

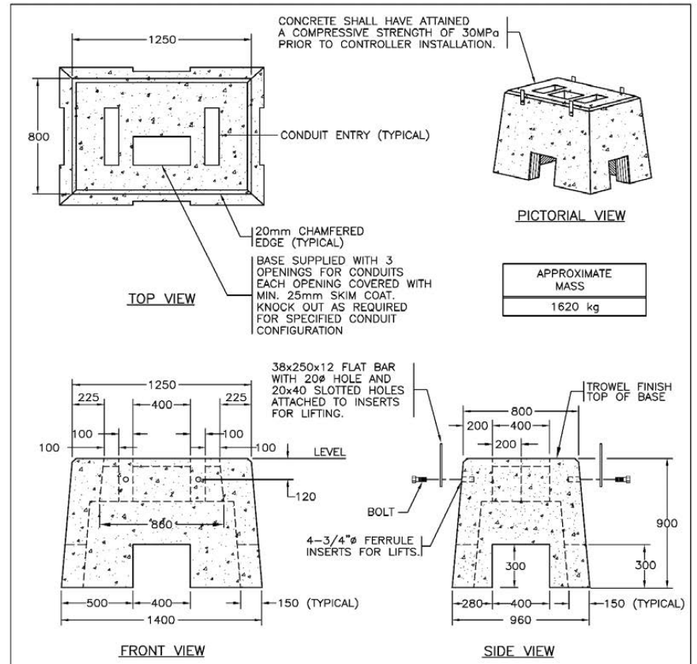

NOTES

1. SEE STANDARD SPECIFICATIONS & SPECIAL PROVISIONS FOR ADDITIONAL INFORMATION.
2. SEE DRAWING SP635–1.1.39 FOR REBAR DETAILS, AND DRAWINGS SP635–1.1.40, 1.1.41 AND 1.1.42 FOR INSTALLATION DETAILS.
3. ALL DIMENSIONS ARE IN MILLIMETRES UNLESS OTHERWISE NOTED.

NOT TO SCALE

BRITISH COLUMBIA — Ministry of Transportation and Infrastructure

No.	Revision	Date
F		
E		
D	GENERAL REVISIONS	FEB 16
C	DRAWING REFERENCE NUMBERS REVISED	AUG 96
B	DRAWING NUMBER CHANGED	AUG 95
A	GENERAL REVISIONS	AUG 94

CONCRETE CONTROLLER BASE DETAILS (PRECAST)

Date: 05/02/16 — Approved: D.N. (Signature on File), Chief Highway Engineer

SPECIFICATION DRAWING No. SP635–1.1.38

Tri-Kon Precast Products Ltd.

601 Patterson Street West
Cranbrook BC V1C 6T3

250-426-8162
info@trikonprecast.com
trikonprecast.com

DRAWING / PRODUCT NAME	CATALOG REFERENCE	SHEET
Concrete Controller Base Details, Precast (BC MoTI SP635-1.1.38)	TK-EL-031	31 / 36
DESCRIPTION	**SHEET FORMAT**	**UNITS / SCALE**
Original reference: Concrete Controller Base Details, Precast (BC MoTI SP635-1.1.38). Technical notes and source identification are preserved.	11 x 17 in / Landscape	As noted / Do not scale
APPROX. WEIGHT - SOURCE VALUES ONLY	**ORIGINAL SOURCE DATE**	**LAYOUT UPDATED ONLY**
See drawing / confirm with Tri-Kon; no weight estimated.	As recorded in original	2026-10-05

Technical content unchanged. Confirm specifications and handling weights with Tri-Kon. Project examples are not standard designs. Document layout: Built by Vision (BBV).

SECTION 635 ELECTRICAL AND SIGNING

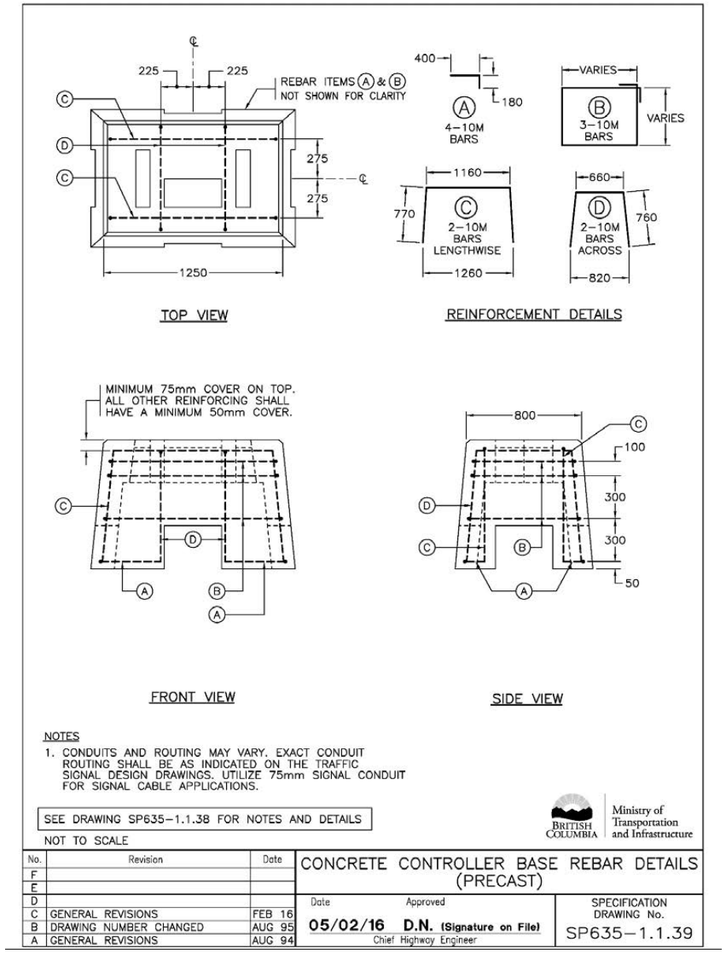

NOTES

1. CONDUITS AND ROUTING MAY VARY. EXACT CONDUIT ROUTING SHALL BE AS INDICATED ON THE TRAFFIC SIGNAL DESIGN DRAWINGS. UTILIZE 75mm SIGNAL CONDUIT FOR SIGNAL CABLE APPLICATIONS.

SEE DRAWING SP635–1.1.38 FOR NOTES AND DETAILS

NOT TO SCALE

BRITISH COLUMBIA Ministry of Transportation and Infrastructure

No.	Revision	Date
F		
E		
D		
C	GENERAL REVISIONS	FEB 16
B	DRAWING NUMBER CHANGED	AUG 95
A	GENERAL REVISIONS	AUG 94

CONCRETE CONTROLLER BASE REBAR DETAILS (PRECAST)

Date 05/02/16 Approved D.N. (Signature on File) Chief Highway Engineer

SPECIFICATION DRAWING No. SP635–1.1.39

Tri-Kon Precast Products Ltd.

601 Patterson Street West
Cranbrook BC V1C 6T3

250-426-8162
info@trikonprecast.com
trikonprecast.com

DRAWING / PRODUCT NAME	CATALOG REFERENCE	SHEET
Concrete Controller Base Rebar Details, Precast (BC MoTI SP635-1.1.39)	TK-EL-032	32 / 36
DESCRIPTION	**SHEET FORMAT**	**UNITS / SCALE**
Original reference: Concrete Controller Base Rebar Details, Precast (BC MoTI SP635-1.1.39). Technical notes and source identification are preserved.	11 x 17 in / Landscape	As noted / Do not scale
APPROX. WEIGHT - SOURCE VALUES ONLY	**ORIGINAL SOURCE DATE**	**LAYOUT UPDATED ONLY**
See drawing / confirm with Tri-Kon; no weight estimated.	As recorded in original	2026-10-05

Technical content unchanged. Confirm specifications and handling weights with Tri-Kon. Project examples are not standard designs. Document layout: Built by Vision (BBV).

SECTION 635 ELECTRICAL AND SIGNING

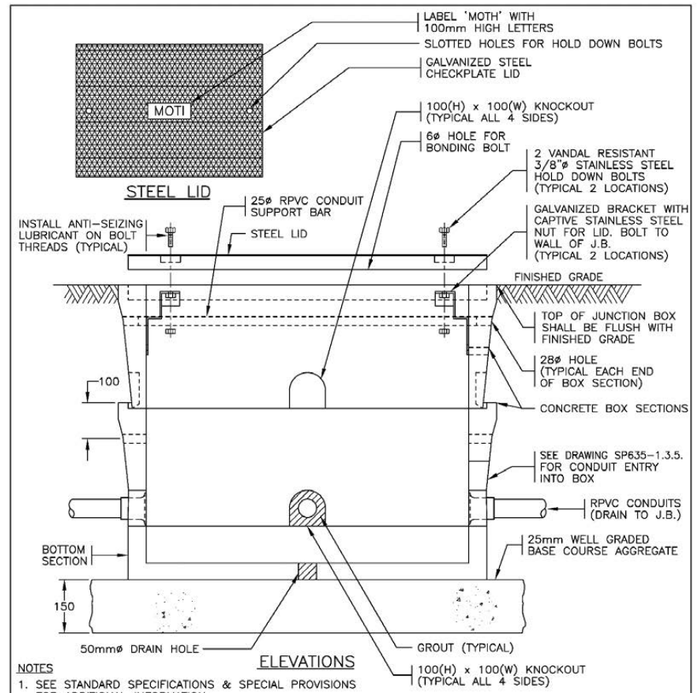

NOTES

1. SEE STANDARD SPECIFICATIONS & SPECIAL PROVISIONS FOR ADDITIONAL INFORMATION.
2. JUNCTION BOXES AND THEIR LIDS/HATCHES SHALL BE DESIGNED BY ENGINEERS REGISTERED WITH THE ASSOCIATION OF PROFESSIONAL ENGINEERS AND GEOSCIENTISTS OF THE PROVINCE OF BC.
3. CONCRETE JUNCTION BOXES AND THEIR LIDS/HATCHES SHALL BE DESIGNED FOR STATIC NON-DELIBERATE VEHICULAR LOADING USING AN UNFACTORED DESIGN WHEEL LOAD OF 5000 KG.
4. VAULTS SHALL BE PRE-CAST CONCRETE WITH A MINIMUM COMPRESSIVE STRENGTH OF 35 MPa AT 28 DAYS.
5. ALL DIMENSIONS ARE IN MILLIMETRES UNLESS OTHERWISE NOTED.

NOT TO SCALE

BRITISH COLUMBIA | Ministry of Transportation and Infrastructure

No.	Revision	Date
F	GENERAL REVISIONS	APR 20
F	GENERAL REVISIONS	APR 17
E	GENERAL REVISIONS	APR 05
D	KON KAST PRODUCT DELETED	OCT 03
C	ANTI-SEIZING LUBRICANT NOTED	NOV 98
B	LID HOLD DOWN REVISED	AUG 96

CONCRETE JUNCTION BOX DETAILS (FOR LOCATIONS NOT ROUTINELY SUBJECTED TO TRAFFIC)

Date 18/11/94 Approved E.L. (Signature on File) Chief Highway Engineer

SPECIFICATION DRAWING No. SP635-1.3.1

BC MoTI SS 2020 635 (82 of 277)

Vol. 2 Page 95 of 452

Tri-Kon Precast Products Ltd.

601 Patterson Street West
Cranbrook BC V1C 6T3

250-426-8162
info@trikonprecast.com
trikonprecast.com

DRAWING / PRODUCT NAME	CATALOG REFERENCE	SHEET
Concrete Junction Box Details (BC MoTI SP635-1.3.1)	TK-EL-033	33 / 36
DESCRIPTION	**SHEET FORMAT**	**UNITS / SCALE**
Original reference: Concrete Junction Box Details (BC MoTI SP635-1.3.1). Technical notes and source identification are preserved.	11 x 17 in / Landscape	As noted / Do not scale
APPROX. WEIGHT - SOURCE VALUES ONLY	**ORIGINAL SOURCE DATE**	**LAYOUT UPDATED ONLY**
See drawing / confirm with Tri-Kon; no weight estimated.	As recorded in original	2026-10-05

Technical content unchanged. Confirm specifications and handling weights with Tri-Kon. Project examples are not standard designs. Document layout: Built by Vision (BBV).

SECTION 635 **ELECTRICAL AND SIGNING**

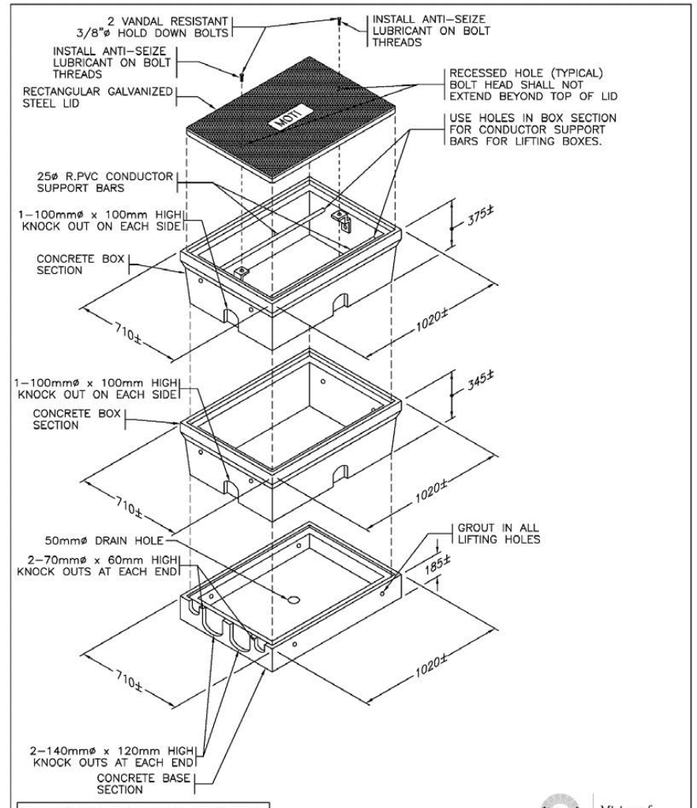

Tri-Kon Precast Products Ltd.

601 Patterson Street West
Cranbrook BC V1C 6T3

250-426-8162
info@trikonprecast.com
trikonprecast.com

DRAWING / PRODUCT NAME	CATALOG REFERENCE	SHEET
Concrete Junction Box Details (BC MoTI SP635-1.3.2)	TK-EL-034	34 / 36
DESCRIPTION	**SHEET FORMAT**	**UNITS / SCALE**
Original reference: Concrete Junction Box Details (BC MoTI SP635-1.3.2). Technical notes and source identification are preserved.	11 x 17 in / Landscape	As noted / Do not scale
APPROX. WEIGHT - SOURCE VALUES ONLY	**ORIGINAL SOURCE DATE**	**LAYOUT UPDATED ONLY**
See drawing / confirm with Tri-Kon; no weight estimated.	As recorded in original	2026-10-05

Technical content unchanged. Confirm specifications and handling weights with Tri-Kon. Project examples are not standard designs. Document layout: Built by Vision (BBV).

SECTION 635 **ELECTRICAL AND SIGNING**

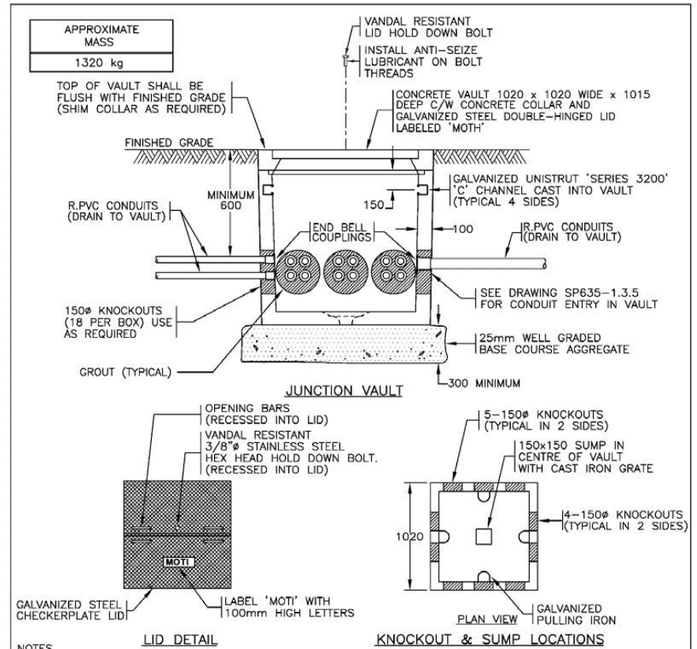

NOTES

1. SEE STANDARD SPECIFICATIONS & SPECIAL PROVISIONS FOR ADDITIONAL INFORMATION.
2. JUNCTION BOXES AND THEIR LIDS/HATCHES SHALL BE DESIGNED BY ENGINEERS REGISTERED WITH WITH THE ASSOCIATION OF PROFESSIONAL ENGINEERS AND GEOSCIENTISTS OF THE PROVINCE OF BC.
3. CONCRETE JUNCTION BOXES AND THEIR LIDS/HATCHES SHALL BE DESIGNED FOR STATIC NON-DELIBERATE VEHICULAR LOADING USING THE WHEEL LOADING FROM EITHER OF THE FOLLOWING:
   1. CANADIAN HIGHWAY BRIDGE DESIGN CODE CSA S6 CL-625;
   2. AASHTO LRFD BRIDGE DESIGN SPECIFICATIONS HL-93; OR
   3. AASHTO STANDARD SPECIFICATIONS FOR HIGHWAY BRIDGES H-20 OR HS-20.
4. VAULTS SHALL BE PRE-CAST CONCRETE WITH A MINIMUM COMPRESSIVE STRENGTH OF 35 MPa AT 28 DAYS.
5. FOR CONCRETE VAULTS IN LOCATIONS ROUTINELY SUBJECTED TO TRAFFIC, VAULTS AND LIDS/HATCHES SHALL BE DESIGNED FOR FULL HIGHWAY LOADING INCREASED BY THE DYNAMIC LOAD ALLOWANCE.
6. ALL DIMENSIONS ARE IN MILLIMETRES UNLESS OTHERWISE NOTED.

NOT TO SCALE

BRITISH COLUMBIA — Ministry of Transportation and Infrastructure

No.	Revision	Date
E	GENERAL REVISIONS	APR 20
D	GENERAL REVISIONS	APR 17
C	LID HOLD DOWN BOLT & ANTI-SEIZE LUBRICANT NOTED	NOV 98
B	NOTE 2 REVISED	AUG 95
A	GENERAL REVISIONS	AUG 94

SMALL CONCRETE VAULT DETAILS – 1020 SQUARE X 1015 DEEP (FOR LOCATIONS NOT ROUTINELY SUBJECTED TO TRAFFIC)

Date Approved: 30/09/93 E.L. (Signature on File) — Chief Highway Engineer

SPECIFICATION DRAWING No. SP635-1.3.3

Tri-Kon Precast Products Ltd.

601 Patterson Street West
Cranbrook BC V1C 6T3

250-426-8162
info@trikonprecast.com
trikonprecast.com

DRAWING / PRODUCT NAME	CATALOG REFERENCE	SHEET
Small Concrete Vault, 1020 Square x 1015 Deep (BC MoTI SP635-1.3.3)	TK-EL-035	35 / 36
DESCRIPTION	**SHEET FORMAT**	**UNITS / SCALE**
Original reference: Small Concrete Vault, 1020 Square x 1015 Deep (BC MoTI SP635-1.3.3). Technical notes and source identification are preserved.	11 x 17 in / Landscape	As noted / Do not scale
APPROX. WEIGHT - SOURCE VALUES ONLY	**ORIGINAL SOURCE DATE**	**LAYOUT UPDATED ONLY**
See drawing / confirm with Tri-Kon; no weight estimated.	As recorded in original	2026-10-05

Technical content unchanged. Confirm specifications and handling weights with Tri-Kon. Project examples are not standard designs. Document layout: Built by Vision (BBV).

SECTION 635 **ELECTRICAL AND SIGNING**

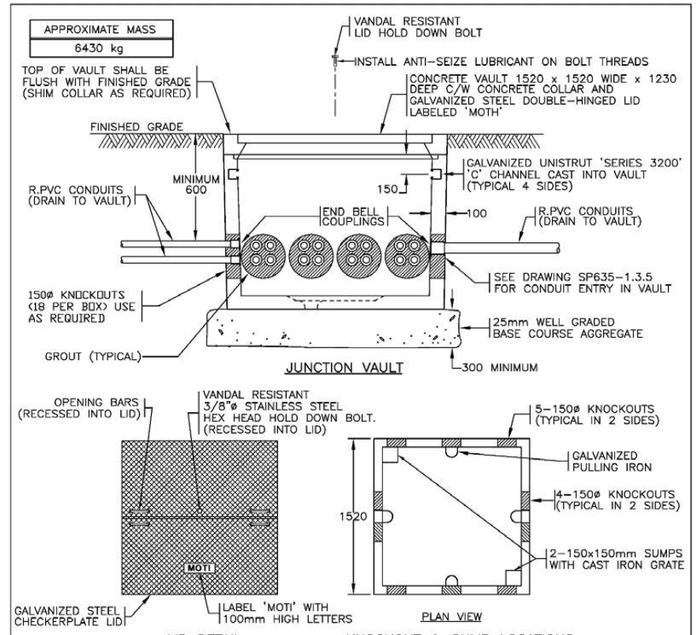

NOTES

1. SEE STANDARD SPECIFICATIONS & SPECIAL PROVISIONS FOR ADDITIONAL INFORMATION.
2. JUNCTION BOXES AND THEIR LIDS/HATCHES SHALL BE DESIGNED BY ENGINEERS REGISTERED WITH WITH THE ASSOCIATION OF PROFESSIONAL ENGINEERS AND GEOSCIENTISTS OF THE PROVINCE OF BC.
3. CONCRETE JUNCTION BOXES AND THEIR LIDS/HATCHES SHALL BE DESIGNED FOR STATIC NON-DELIBERATE VEHICULAR LOADING USING THE WHEEL LOADING FROM EITHER OF THE FOLLOWING:
   1. CANADIAN HIGHWAY BRIDGE DESIGN CODE CSA S6 CL-625;
   2. AASHTO LRFD BRIDGE DESIGN SPECIFICATIONS HL-93; OR
   3. AASHTO STANDARD SPECIFICATIONS FOR HIGHWAY BRIDGES H-20 OR HS-20.
4. VAULTS SHALL BE PRE-CAST CONCRETE WITH A MINIMUM COMPRESSIVE STRENGTH OF 35 MPa AT 28 DAYS.
5. FOR CONCRETE VAULTS IN LOCATIONS ROUTINELY SUBJECTED TO TRAFFIC, VAULTS AND LIDS/HATCHES SHALL BE DESIGNED FOR FULL HIGHWAY LOADING INCREASED BY THE DYNAMIC LOAD ALLOWANCE.
6. ALL DIMENSIONS ARE IN MILLIMETRES UNLESS OTHERWISE NOTED.

NOT TO SCALE

BRITISH COLUMBIA Ministry of Transportation and Infrastructure

No.	Revision	Date
F		
E		
D		
C		
B		
A	GENERAL REVISIONS	APR 20

CONCRETE VAULT DETAILS – 1520 SQUARE X 1230 DEEP (FOR LOCATIONS NOT ROUTINELY SUBJECTED TO TRAFFIC)

Date Approved

Chief Highway Engineer

SPECIFICATION DRAWING No. SP635-1.3.4

Tri-Kon Precast Products Ltd.

601 Patterson Street West
Cranbrook BC V1C 6T3

250-426-8162
info@trikonprecast.com
trikonprecast.com

DRAWING / PRODUCT NAME	CATALOG REFERENCE	SHEET
Concrete Vault, 1520 Square x 1230 Deep (BC MoTI SP635-1.3.4)	TK-EL-036	36 / 36
DESCRIPTION	**SHEET FORMAT**	**UNITS / SCALE**
Original reference: Concrete Vault, 1520 Square x 1230 Deep (BC MoTI SP635-1.3.4). Technical notes and source identification are preserved.	11 x 17 in / Landscape	As noted / Do not scale
APPROX. WEIGHT - SOURCE VALUES ONLY	**ORIGINAL SOURCE DATE**	**LAYOUT UPDATED ONLY**
See drawing / confirm with Tri-Kon; no weight estimated.	As recorded in original	2026-10-05

Technical content unchanged. Confirm specifications and handling weights with Tri-Kon. Project examples are not standard designs. Document layout: Built by Vision (BBV).